235
台灣 新北市
中和區連城路192號6樓
晶睿通訊股份有限公司
JOANNE CHANG

JOANNE CHANG
VIVOTEK INC
6TH FL, 192 LIEN CHENG RD
CHUNG HO DISTRICT
NEW TAIPEI 235
NEW TAIPEI
235 TAIWAN TAIWAN

Date:	2020/09/21
Subscriber:	100504413
PartySite:	125336
File No:	E324690
Project No:	4789514534
PD No:	20045916
Type:	R
PO Number:	C1292003057

Subject: **Procedure And/Or Report Material**

The following material resulting from the investigation under the above numbers is enclosed.

Issue Date	Vol	Sec	Pages	Revised Date
	1		Revised Index Page(s) 1	2020/09/14
2020/09/14	1	27	Cert of Compliance	
2020/09/14	1	27	Add New Proc/Report Sect	

Legible images may be viewed online

Please file revised pages and illustrations in place of material of like identity. New material should be filed in its proper numerical order.

NOTE: Follow-Up Service Procedure revisions DO NOT include Cover Pages, Test Records and Conclusion Pages. Report revisions DO NOT include Authorization Pages, Indices, Section General Pages and Appendixes.

Please review this material and report any inaccuracies to UL's Customer Service Professionals. Contact information for all of UL's global offices can be found at http://ul.com/aboutul/locations.

If you'd like to receive updated materials FASTER, UL offers electronic access and/or delivery of this material. For more details, contact UL's Customer Service Professionals as shown above.

This material is provided on behalf of UL LLC(UL) or any authorized licensee of UL.

TPI File

INDEX

Model Number	Section	Requirements Evaluated to (US and/or CN)
IP9165-HP, IP9165-LPC, IP9165-HT, IP9165-HPPM, IP9165-LPCTW, IP9165-LPR	1	US and CN
1) IR Ball, 2MP 2.8mm; 2) IR Ball, 5MP 2.8mm; 3) Network Camera 1) HC30WE2R3, IT9360-HNWL; 2) HC30WE5R3, IT9380-HNWL; 3) IT9360-H, IT9380-H	2	US and CN
IT9380T-HNWL and HC30WE5R2, IT9388-HT	3	US and CN
HC30WB2R1, IB9360-HNWL, HC30WB5R1, IB9380-HNWL, IB9360-H,IB9380-H	4	US and CN
WITHDRAWN	5	US and CN
HC30W45R2, FD9380T-HNWL	6	US and CN
FE9380-HNWL, HC30WF5R1	7	US and CN
HC30W42R3, FD9360-HNWL, HC30W45R3, FD9380-HNWL, FD9360-H, FD9380-H	8	US and CN
HC30WB5R2, IB9380T-HNWL, IB9368-HT, IB9388-HT	9	US and CN
SNC-WL862	10	US and CN
MA9322-EHTV	11	US and CN
SD9374-XXXX (X can be any letter or number or blank; The "-" is not provided whAen X is blank; Suffix X defines for marketing difference)	12	US and CN
CC9381-HV	13	US and CN
MD9560-H, MD9561-H, MD9581-H, MD9561-DH	14	US and CN
FD9166-HN	15	US and CN
CD51-XXX-HW, CD41-XXX-HW, CD31-XXX-HW (X=A~Z, a~z, 0~9, blank, or "-" for marketing purpose)	16	US and CN
CD51-XXXE-HW, CD41-XXXE-HW, CD31-XXXE-HW (X=A~Z, a~z, 0~9, blank, or "-" for marketing purpose)	17	US and CN
Indoor Mini Dome Camera, CM41-XXX-HW (X=A~Z, a~z, 0~9, blank, or "-" for marketing purpose)	18	US and CN
CD61-XXXE-HW (X=A~Z, a~z, 0~9, blank, or "-" for marketing purpose)	19	US and CN
CD61-XXX-HW (X=A~Z, a~z, 0~9, space, or "-" for marketing purpose)	20	US and CN
FD9368-HTV, FD9388-HTV	21	US and CN
Network Camera IP9164-HT, IP9164-LPC	22	US and CN
ND9441P, ND9541P	23	US and CN
FE9380-HV	24	US and CN
IC9581-H	25	US and CN
LC9368-HTV	26	US and CN
FE9382-EHV-v2	**27**	**US and CN**

CERTIFICATE OF COMPLIANCE

Certificate Number	E324690
Report Reference	E324690-20200914
Issue Date	2020-SEPTEMBER-19
Issued to:	VIVOTEK INC 6TH FL, 192 LIEN CHENG RD CHUNG HO DISTRICT NEW TAIPEI 235 TAIWAN
This certificate confirms that representative samples of	AUDIO/VIDEO, INFORMATION AND COMMUNICATION TECHNOLOGY EQUIPMENT Network Camera, FE9382-EHV-v2
	Have been investigated by UL in accordance with the Standard(s) indicated on this Certificate.
Standard(s) for Safety:	UL 62368-1 & CAN/CSA C22.2 No. 62368-1-14 - Audio/video, Information and Communication Technology Equipment - Part 1: Safety Requirements
Additional Information:	See the UL Online Certifications Directory at https://iq.ulprospector.com for additional information.

This *Certificate of Compliance* does not provide authorization to apply the UL Mark. Only the UL Follow-Up Services Procedure provides authorization to apply the UL Mark.

Only those products bearing the UL Mark should be considered as being UL Certified and covered under UL's Follow-Up Services.

Look for the UL Certification Mark on the product.

Bruce Mahrenholz, Director North American Certification Program

UL LLC

Any information and documentation involving UL Mark services are provided on behalf of UL LLC (UL) or any authorized licensee of UL. For questions, please contact a local UL Customer Service Representative at http://ul.com/aboutul/locations/

File E324690
Project 4789514534

September 14, 2020

REPORT

on

Audio/Video, Information and Communication Technology Equipment

Vivotek Inc
New Taipei, Taiwan

Copyright © 2020 UL LLC

UL LLC authorizes the above named company to reproduce this Report only for purposes as described in the Conclusion, provided it is reproduced in its entirety.

UL TEST REPORT AND PROCEDURE	
Standard:	UL 62368-1, 2nd Edition, 2014-12-01 (Audio/video, Information and Communication Technology Equipment - Part 1: Safety Requirements) CAN/CSA C22.2 No. 62368-1-14, 2nd Edition, 2014-12 (Audio/video, Information and Communication Technology Equipment - Part 1: Safety Requirements)
Certification Type:	Listing
CCN:	AZOT, AZOT7 (Audio/Video, Information and Communication Technology Equipment)
Complementary Certification CCN	N/A
Product:	Network Camera
Model:	FE9382-EHV-v2
Rating:	PoE 42.5-57 Vdc, 0.29-0.22 A or 12 Vdc, 0.98 A (Optionally provided on marking plate)
Applicant Name and Address:	VIVOTEK INC 6TH FL, 192 LIEN CHENG RD CHUNG HO DISTRICT NEW TAIPEI, 235 TAIWAN

This is to certify that representative samples of the products covered by this Test Report have been investigated in accordance with the above referenced Standards. The products have been found to comply with the requirements covering the category and the products are judged to be eligible for Follow-Up Service under the indicated Test Procedure. The manufacturer is authorized to use the UL Mark on such products which comply with this Test Report and any other applicable requirements of UL LLC ('UL') in accordance with the Follow-Up Service Agreement. Only those products which properly bear the UL Mark are considered as being covered by UL's Follow-Up Service under the indicated Test Procedure.

The applicant is authorized to reproduce the referenced Test Report provided it is reproduced in its entirety.

[ ] UL authorizes the applicant to reproduce the latest pages of the referenced Test Report consisting of this page through to the end of the Engineering Conditions of Acceptability.

Any information and documentation involving UL Mark services are provided on behalf of UL LLC (UL) or any authorized licensee of UL

Prepared by: Steven Huang Reviewed by: Jong Lee

Supporting Documentation

The following documents located at the beginning of this Procedure supplement the requirements of this Test Report:

A. Authorization - The Authorization page may include additional Factory Identification Code markings.

B. Generic Inspection Instructions -

i. Part AC details important information which may be applicable to products covered by this Procedure. Products described in this Test Report must comply with any applicable items listed unless otherwise stated in the body of this Test Report

ii. Part AE details any requirements which may be applicable to all products covered by this Procedure. Products described in this Test Report must comply with any applicable items listed unless otherwise stated in the body of each Test Report

C. Listing Mark/Recognized Component Mark Data Page - details the requirements for the UL Certification Mark which is not controlled by the technical standard used to investigate these products. Products are permitted to bear only the Certification Mark(s) corresponding to the countries for which it is certified, as indicated in each Test Report.

Product Description

The equipment is a Network Camera, which is intended to use within audio/video, information and communication technology equipment.

The equipment consists of electronic components are mounted on PCB and housed by plastic/metal enclosures and secured lens and IRLED cover together and metal enclosure is fixed by screws. It is intended to be mounted on wall or ceiling and installed in outdoor location.

The equipment is power supplied from the external power adaptor or Power-over-Ethernet (PoE) device which is complied with the requirement of Limited Power Source (LPS) or Power source class 2 (PS2).

Model Differences

N/A

Test Item Particulars (NOT FOR FIELD REPRESENTATIVE'S USE)

Classification of installation and use by..... :	☒ Ordinary person ☐ Instructed person ☐ Skilled person ☒ Children likely to be present
Supply Connection..... :	☐ pluggable equipment ☐ type A ☐ type B ☐ permanent connection ☐ detachable power supply cord ☐ non-detachable power supply cord ☒ not directly connected to the mains
Equipment mobility..... :	☐ movable ☐ hand-held ☐ transportable ☒ stationary ☐ for building-in ☐ direct plug-in ☐ rack-mounting ☒ wall-mounted
Over voltage category (OVC) ..... :	☐ OVC I ☐ OVC II ☐ OVC III ☐ OVC IV ☒ other: not directly connected to the mains
Fundamental Frequency..... :	☐ 50/60 Hz ☐ 50 Hz ☐ 60 Hz ☒ other supplied by DC
Class of equipment ..... :	☐ Class I ☐ Class II ☒ Class III ☐ Not classified
Access location ..... :	☐ restricted access location ☒ N/A
Pollution degree (PD) ..... :	☐ PD 1 ☐ PD 2 ☒ PD 3
IP protection class ..... :	☒ IP X0 ☐ IP ____
Tested for IT power systems ..... :	☐ Yes ☒ No
IT testing, phase-phase voltage (V) ..... :	☐ ____ ☒ N/A
Altitude during operation (m) ..... :	☒ Up to 2,000 ☐ Up to _____

Altitude of test laboratory (m) ..... :	☒ Less than 2,000 ☐ Approximately _____
Mass of equipment (kg) ..... :	0.7 (with mounting kit) 0.62 (without mounting kit)

Technical Consideration (NOT FOR FIELD REPRESENTATIVE'S USE)

- The product was submitted and evaluated for use at the maximum ambient temperature (Tma) permitted by the manufacturer's specification of: 55°C
- The following are available from the Applicant upon request: Installation (Safety) Instructions / Manual.
- The product was intended to be supplied by an UL Listed power supply suitable for used at Tma 55 degree C, whose output meets ES1 (or SELV) and PS2 (or LPS), and rated PoE 42.5-57 Vdc, 0.29-0.22 A;
- LEDs provided in the product are considered low power devices: Yes
- IR LED provided in the product has been tested and complied with the requirement of Exempt Group according to standard IEC 62471.
- Based on user instruction, the product is only to be connected to PoE network without routing to outside plant.
- The outdoor equipment/enclosure was evaluated for use in an ambient range of: -40°C to 55°C
- The product was also investigated to the following additional standards: CAN/CSA-C22.2 No. 60950-22 Information technology equipment - Safety - Part 22: Equipment to be installed outdoors Edition 2 Issue Date 03/2017 & UL60950-22 INFORMATION TECHNOLOGY EQUIPMENT - SAFETY - PART 22: EQUIPMENT TO BE INSTALLED OUTDOORS Edition 2 Issue Date 03/31/2017.
- Based on manufacturer declaration, there is no heater function inside the EUT.

Additional Information

N/A

Additional Standard

The product fulfils the requirements of:

Markings, instructions and instructional safeguards

Clause Title	Marking or Instruction Details	
	English	French
Equipment identification marking – Manufacturer identification	Listee's or Recognized company's name, Trade Name, Trademark or File Number	
Equipment identification marking – model identification	Model Number	
Equipment rating marking –ratings (optional)	Input Ratings (voltage, frequency/dc, current/power)	
Inter-connecting cables - External detachable	Listee's Name and Part number (Marking or Instruction)	
Protective earthing is used as a safeguard	Ensure to connect the power supply to a socket-outlet with earthing connection, or equivalent.	
Instruction/Installation/Safety	Operating/Instruction/Safety Manual might be provided by Hardcopy or website. If the manual supplied via website, a hard copy notice should be provided alerting the user/installer of the need to access the company website which includes the URL, and this hard copy notice should include the signal word "IMPORTANT" and a statement "See Installation Instructions Before Connecting the Supply" or similar.	
Instruction for power adapter	If the power adapter doesn't ship with the unit, the user manual shall have the description as below or equivalent: “This unit is intended to be supplied by an UL Listed PoE (Power over Ethernet) power source/device suitable for use at Tma 55 degree C whose output meets LPS (or PS2) and is rated 42.5-57Vdc, 0.29-0.22A minimum“, or UL Listed power source suitable for use at Tma 55 degree C whose output meets LPS (or PS2) and is rated 12Vdc, 0.98A minimum.“, or “Please contact with VIVOTEK for power source selection." or equivalent.	

Special Instructions to UL Representative

- For Power Supply without listing manufacturer and model (Various/Interchangeable) in critical component table, the Field Representative should verify the Tma (maximum ambient temperature) is minimum 55 degree C from the updated version of power adaptor(s) UL Certification reports per the latest revision or report revision (UL 60950-1, 2nd Edition, dated 2014-10-14 or UL 62368-1, 2nd Edition, 2014-12-01) (provided from customer).

- If the Power Supply does not mark with "LPS" or "Limited Power Source", please check the UL report for Power Supply and confirm whether it complies with Limited Power Source or PS2 in Technical Consideration.

- Please verify the Manufacturer has a method to manage distribution of all products with Canadian certification mark not intended include the dual markings.

Production-Line Testing Requirements

Electric Strength Test Special Constructions - Refer to Generic Inspection Instructions, Part AC for further information.

Model	Component	Removable Parts	Test probe location	V rms	V dc	Test Time, s
--	--	--	--	--	--	--

Earthing Continuity Test Exemptions - This test is not required for the following models:

All models

Electric Strength Test Exemptions - This test is not required for the following models:

All models
Electric Strength Test Component Exemptions - The following solid-state components may be disconnected from the remainder of the circuitry during the performance of this test:
N/A
Sample and Test Specifics for Follow-Up Tests at UL

Model	Component	Material	Test	Sample(s)	Test Specifics
--	--	--	--	--	--

4.1.2	**TABLE: list of critical components**					Pass
Object/part or Description	Manufacturer/ trademark	type/model	technical data	Product Category CCN(s)	Required Marks of Conformity	Supplement ID
01. External Power Adaptor (Optional)	Interchangeable	Interchangeable	O/P: 42.5-57 Vdc, 0.29-0.22 A or 12 Vdc, 0.98 A minimum, 55 degree C minimum, complied with LPS or PS2	NWGQ/7, QQGQ/7, AZOT/7, QQJQ/7	UL	
02. Enclosure	--	--	--	--	--	
02-1. Plastic lens cover	TEIJIN LIMITED RESIN AND PLASTIC	L-1225U(#)(f1), L-1225V(#)(f1), L-1225Z(#1)(f1)	HB minimum., 2.5 mm thickness minimum. 125 degree C. See Illustration-01 for details.	QMFZ2/8	UL	ILL-1
02-2. Plastic IR LED cover	TEIJIN LIMITED RESIN AND PLASTIC	L-1225U(#)(f1), L-1225V(#)(f1), L-1225Z(#1)(f1)	HB minimum., 2.4 mm thickness minimum. 125 degree C. See Illustration-02 for details.	QMFZ2/8	UL	ILL-2
02-3. Top metal enclosure	Interchangeable	Interchangeable	Aluminium, 2.5 mm thickness minimum. See Illustration-03 for details.	--	--	ILL-3
02-4. Bottom metal enclosure	Interchangeable	Interchangeable	Aluminium, 2.5 mm thickness minimum. See Illustration-04 for details.	--	--	ILL-4
02-5. Bottom screw	Interchangeable	Interchangeable	Stainless steel, M5 x 4 mm. See Illustration-05 for details.	--	--	ILL-5
03. Mounting kit	Interchangeable	Interchangeable	Aluminium. See Illustration-06 for details.	--	--	ILL-6
04. Gasket (Between plastic lens cover and top metal enclosure)	Momentive Performance Materials Japan L L	TSE2186U(aq)	HB minimum, Silicone rubber. See Illustration-07 for details.	QMFZ2/8	UL	ILL-7

	C					
05. Gasket (Between top plastic IR LED cover and top metal enclosure inner)	Momentive Performance Materials Japan L L C	TSE2186U(aq)	HB minimum, Silicone rubber. See Illustration-08 for details.	QMFZ2/8	UL	ILL-8
06. Gasket (Between top plastic IR LED cover and top metal enclosure outer)	Momentive Performance Materials Japan L L C	TSE2186U(aq)	HB minimum, Silicone rubber. See Illustration-09 for details.	QMFZ2/8	UL	ILL-9
07. Gasket (Between top metal enclosure and bottom metal enclosure)	Momentive Performance Materials Japan L L C	TSE2186U(aq)	HB minimum, Silicone rubber. See Illustration-10 for details.	QMFZ2/8	UL	ILL-10
08. Gasket (Between bottom screw and bottom metal enclosure)	ExxonMobil	Vistalon 3666	EPDM Rubber (Vivotek part No. 612017300G) See Illustration-11 for details.	--	--	ILL-11
09. Gasket (Between top metal enclosure and microphone)	Momentive Performance Materials Japan L L C	TSE221-5U(ad)	HB minimum, Silicone rubber. See Illustration-12 for details.	QMFZ2/8	UL	ILL-12
10. IO cable rubber (for LAN cable)	Momentive Performance Materials Japan L L C	TSE221-5U(ad)	HB minimum, Silicone rubber. See Illustration-13 for details.	QMFZ2/8	UL	ILL-13
11. IO cable rubber (for DC cable)	Momentive Performance Materials Japan L L C	TSE2186U(aq)	HB minimum, Silicone rubber. See Illustration-14 for details.	QMFZ2/8	UL	ILL-14
12. Lithium rechargeable coin	SEIKO INSTRUMENTS INC	MS621T	Max Charging Voltage 3.4 Vdc, Max Charging Current	BBCV2	UL	

battery (BT1) (On Main board)	MICRO-ENERGY DIV		300 mA			
13. IR LED (Four provided) (LD3) (On the IR LED board)	Lumileds	L1I0-0850150000000	Exempt Group, 850 nm, 335 mW/sr (Complied with IEC 62471:2006 Exempt Group)	--	--	
14. PoE transformer (T1) (On the Main board)	Interchangeable	Interchangeable	105 degree C minimum. See Illustration-15 for details.	--	--	ILL-15
15. Internal plastic parts/material	Interchangeable	Interchangeable	V-2 min., VTM-2, HF-2 (except mounted on V-1 class material)	QMFZ2	UL	
15a. Internal Plastic Part Materials (Optional) (Alternate)	Interchangeable	Interchangeable	Flammability level is ignored, when one or more layers of thin insulating material, used directly on any surface of V-2 class material within the fire enclosure	--	--	
15b. Internal Plastic Part Materials (Optional) (Alternate)	Interchangeable	Interchangeable	Flammability level is ignored, when small parts (1750 mm^3 maximum) are mounted on V-1 class material	--	--	
15c. Internal Plastic Part Materials (Optional) (Alternate)	Interchangeable	Interchangeable	Flammability level is ignored, when small parts (4 g maximum or 1750 mm^3 max.) are separated from electrical parts (other than insulated wires and cables) by at least 13 mm of air or by a solid barrier of V-0 class material.	--	--	
16. PWB	Interchangeable	Interchangeable	V-1 minimum, 105 degree C minimum.	ZPMV2	UL	

17. Label	Interchangeable	Interchangeable	80 degree C if maximum surface temperature not specified.	PGDQ2, PGJI2	UL	
17a. Permanency of Marking (Alternate)	--	--	Engraved laser marking.	--	--	
17b. Permanency of Marking (Alternate)	--	--	Permanently ink-stamped, silk-screened, molded in, or in self-adhesive labels.	--	--	
18. Interconnecting Cable (Optional)	Interchangeable	Interchangeable	Minimum 60 degree C, minimum 60 V, maximum 3.05 m long, jacketed, VW-1 or FT-1	AVLV2, ZPFW2, DVPJ	UL	
18a. Interconnecting Cable (Optional) (Alternate)	Interchangeable	Interchangeable	Type CMP, CMR, CMG, CM, CMX, CMUC, or CMH.	DUZX	UL	
18b. Interconnecting Cable (Optional) (Alternate)	Interchangeable	Interchangeable	Maximum 3.05 m long, jacketed	DUXR/2	UL	
19. Wiring, internal ES1 circuits (Optional)	Interchangeable	Interchangeable	FEP, PTFE, PVC, TFE, neoprene, polyimide or marked VW-1; min 60 V, 60 degree C.	AVLV2	UL	
20. Connectors and Receptacles (ES1 circuits)	Interchangeable	Interchangeable	Copper alloy pins housed in bodies of plastic rated V-2 minimum	QMFZ2	UL	
20a. Connectors and Receptacles (ES1 circuits) (alternate)	Interchangeable	Interchangeable	Minimum 57 V.	ECBT2	UL	
20b. Connectors and Receptacles (ES1 circuits) (alternate)	Interchangeable	Interchangeable	--	DUXR2	UL	

21. Plastic Material of Flexible Printed Wiring (Optional)	Interchangeable	Interchangeable	V-2 min. or VTM-2 min. when no components mounted on surface.	QMFZ2 or QMTS2	UL	
21a. Plastic Material of Flexible Printed Wiring (Alternate) (Optional)	Interchangeable	Interchangeable	V-2 min. or VTM-2 min. when no components mounted on surface.	ZPMV2 or ZPXK2	UL	
21b. Plastic Material of Flexible Printed Wiring (Alternate) (Optional)	Interchangeable	Interchangeable	V-1 min. or VTM-1 min. when components mounted on surface existed.	ZPMV2 or ZPXK2	UL	

ENCLOSURES

Type	Supplement Id	Description
Photographs	Figure-01	Overall top view
	Figure-02	Overall bottom view
	Figure-03	Internal view-1
	Figure-04	Internal view-2
	Figure-05	Internal view-3
	Figure-06	Internal view-4
	Figure-07	Internal view-5
	Figure-08	Internal view-6
	Figure-09	Main board top view
	Figure-10	Main board bottom view
	Figure-11	Sensor board top view
	Figure-12	Sensor board bottom view
	Figure-13	IR LED board top view
	Figure-14	IR LED board bottom view
Illustrations	Illustration-01	Plastic Lens cover drawing
	Illustration-02	IR LED plastic cover drawing
	Illustration-03	Top metal enclosure drawing
	Illustration-04	Bottom metal enclosure drawing
	Illustration-05	Bottom screw drawing
	Illustration-06	Mounting kit drawing
	Illustration-07	Gasket (Between plastic lens cover and top metal enclosure)
	Illustration-08	Gasket (Between top plastic IRLED cover and top metal enclosure inner)
	Illustration-09	Gasket (Between top plastic IRLED cover and top metal enclosure outer)
	Illustration-10	Gasket (Between top metal enclosure and bottom metal enclosure)
	Illustration-11	Gasket (Between bottom screw and bottom metal enclosure)
	Illustration-12	Gasket (Between top metal enclosure and microphone)
	Illustration-13	IO cable rubber (For LAN cable)
	Illustration-14	IO cable rubber (For DC cable)
	Illustration-15	PoE Transformer spec.
	Illustration-16	User’s manual

VIVOTEK

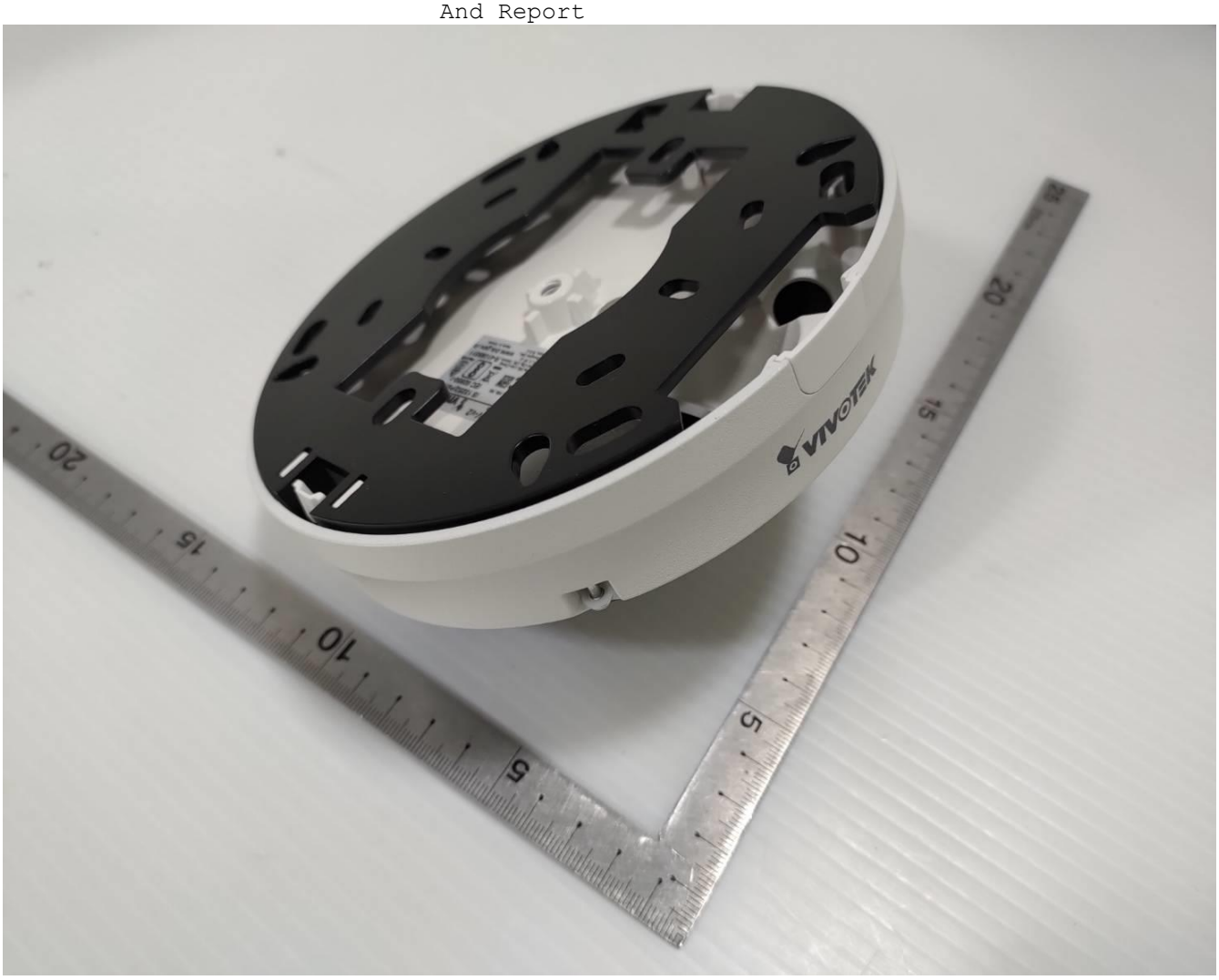
VIVOTEK

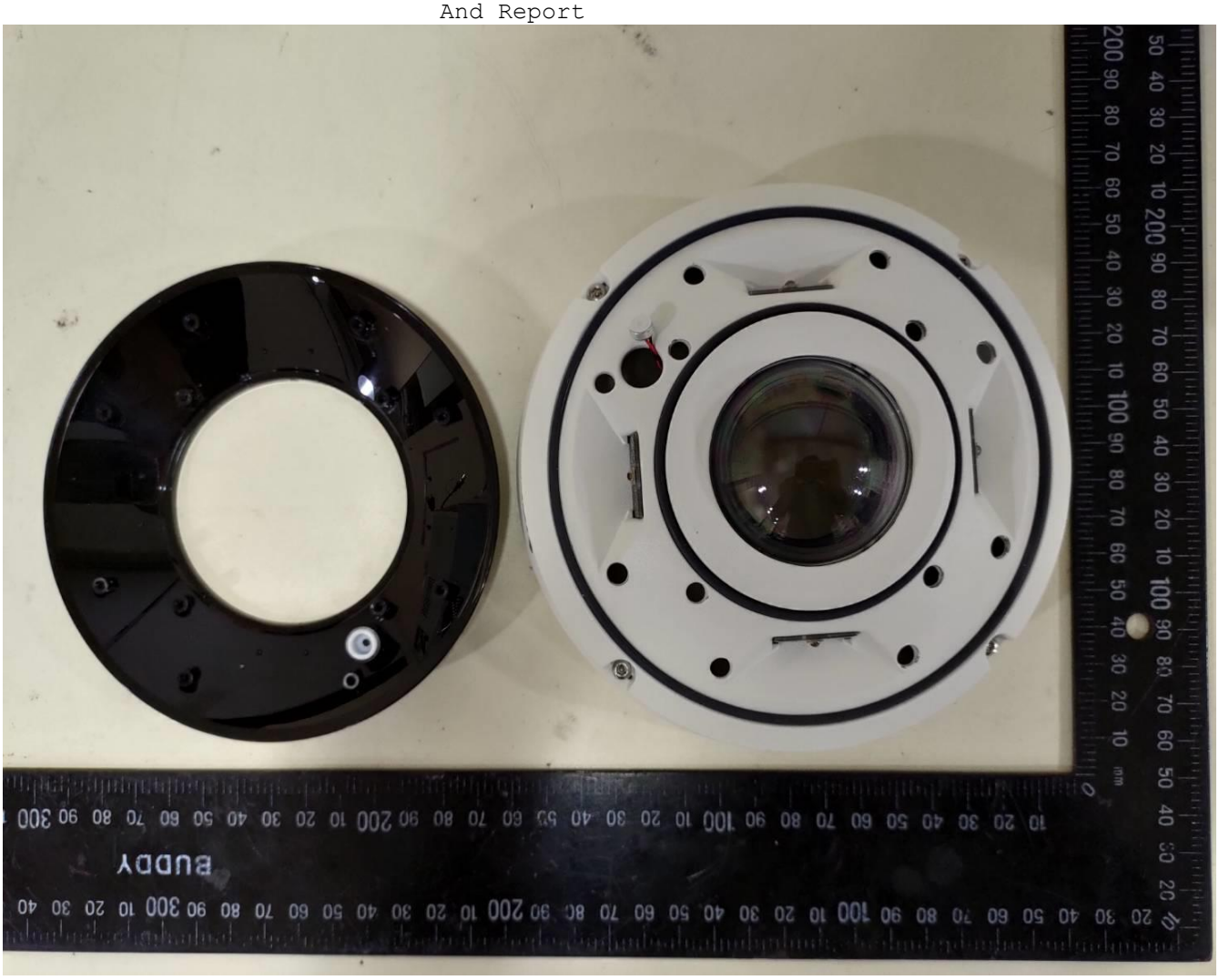
BUDDY

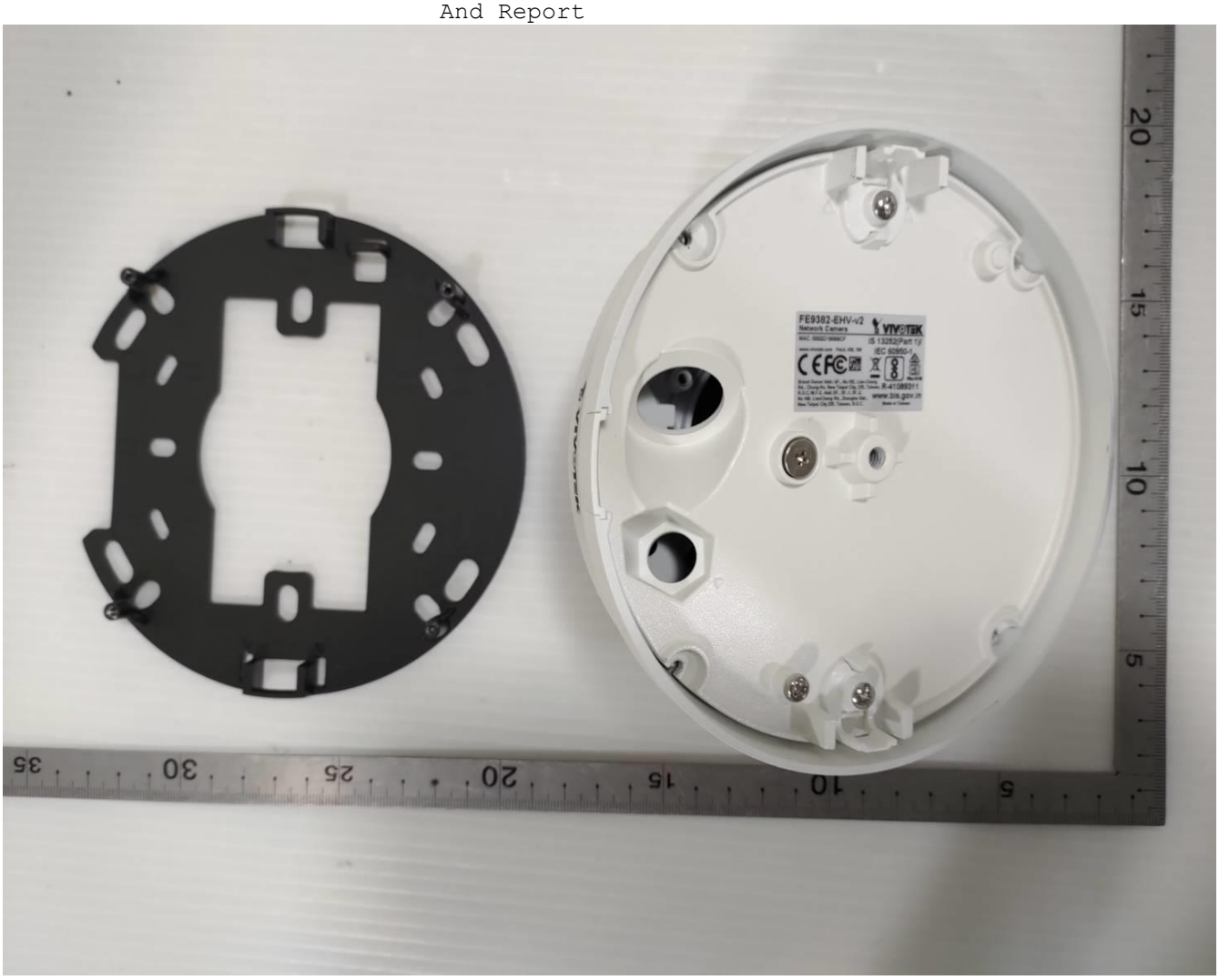
FE9382-EHV-v2
Network Camera
VIVOTEK
IS 13252(Part 1)
IEC 60950-1
R-41089311
www.bsmi.gov.tw
Made in Taiwan

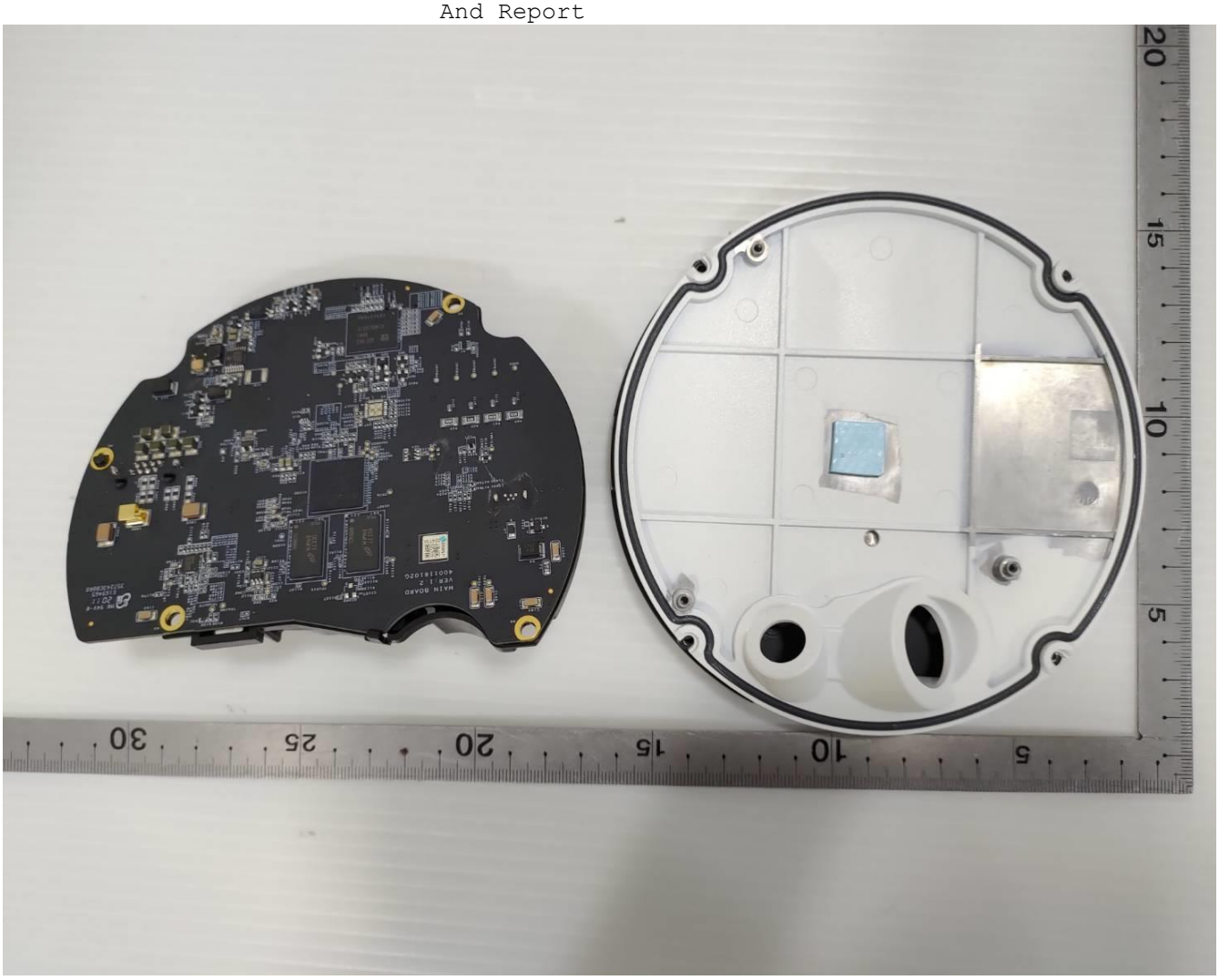
MAIN BOARD
VER:1.2
4001181026
20
15
10
5
30
25
20
15
10
5

1941
1947
MTSE018
25
20
15
10
5
15
10
5

15
10
5
20
15
10
5

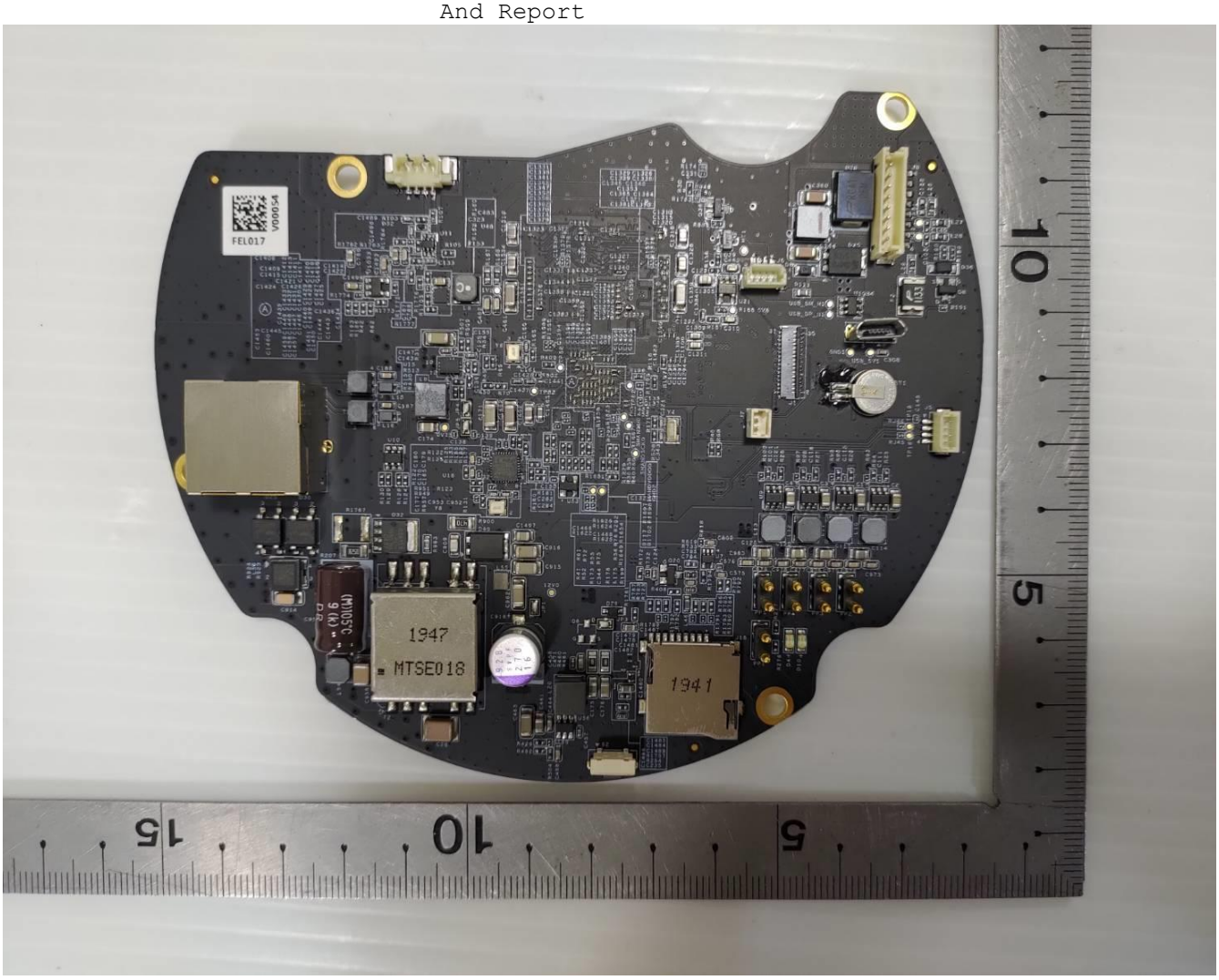
FEL017
V00034
1947
MTSE018
1941
15
10
5
10
5

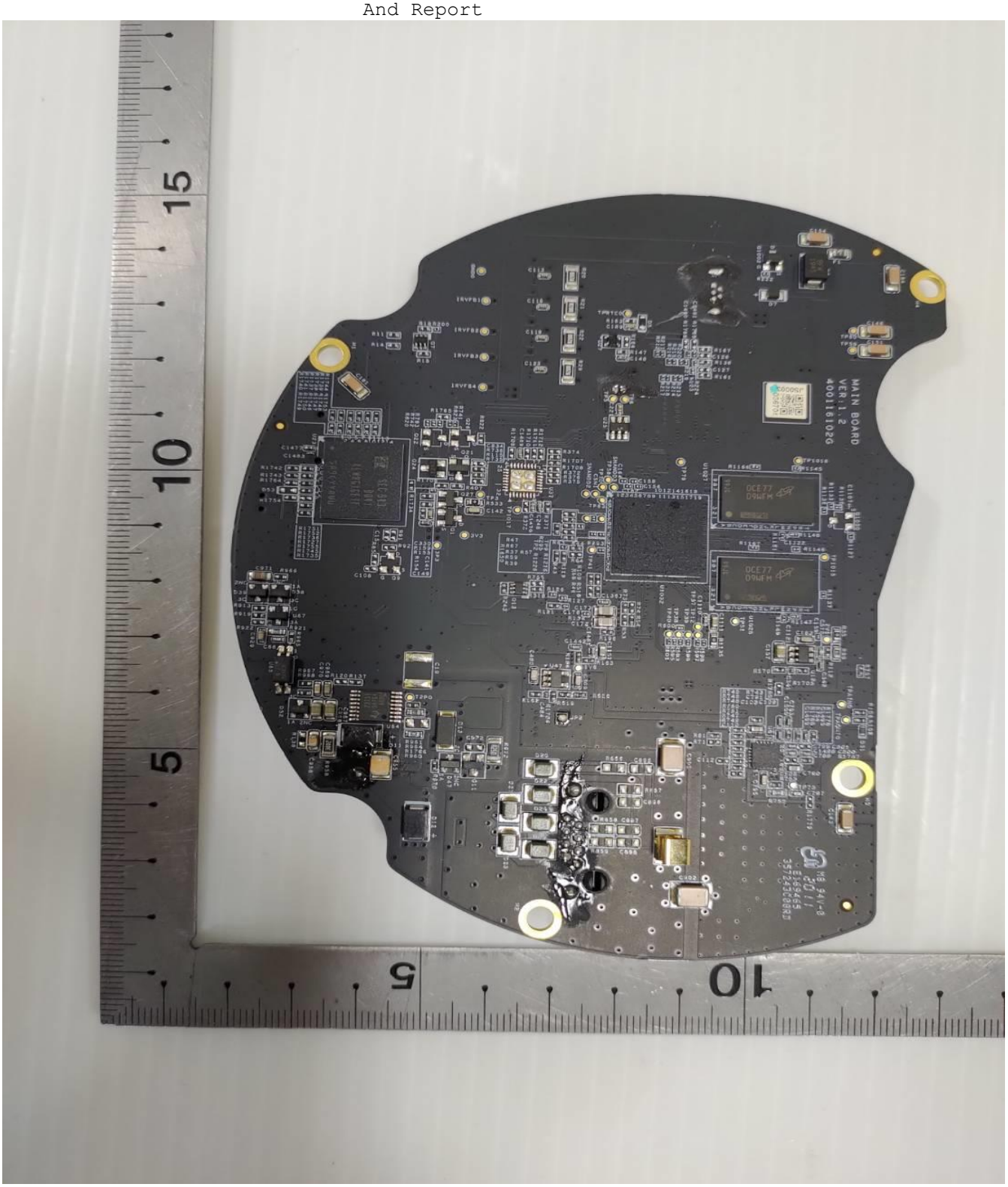
MAIN BOARD
VER:1.2
400181020
15
10
5
5
10

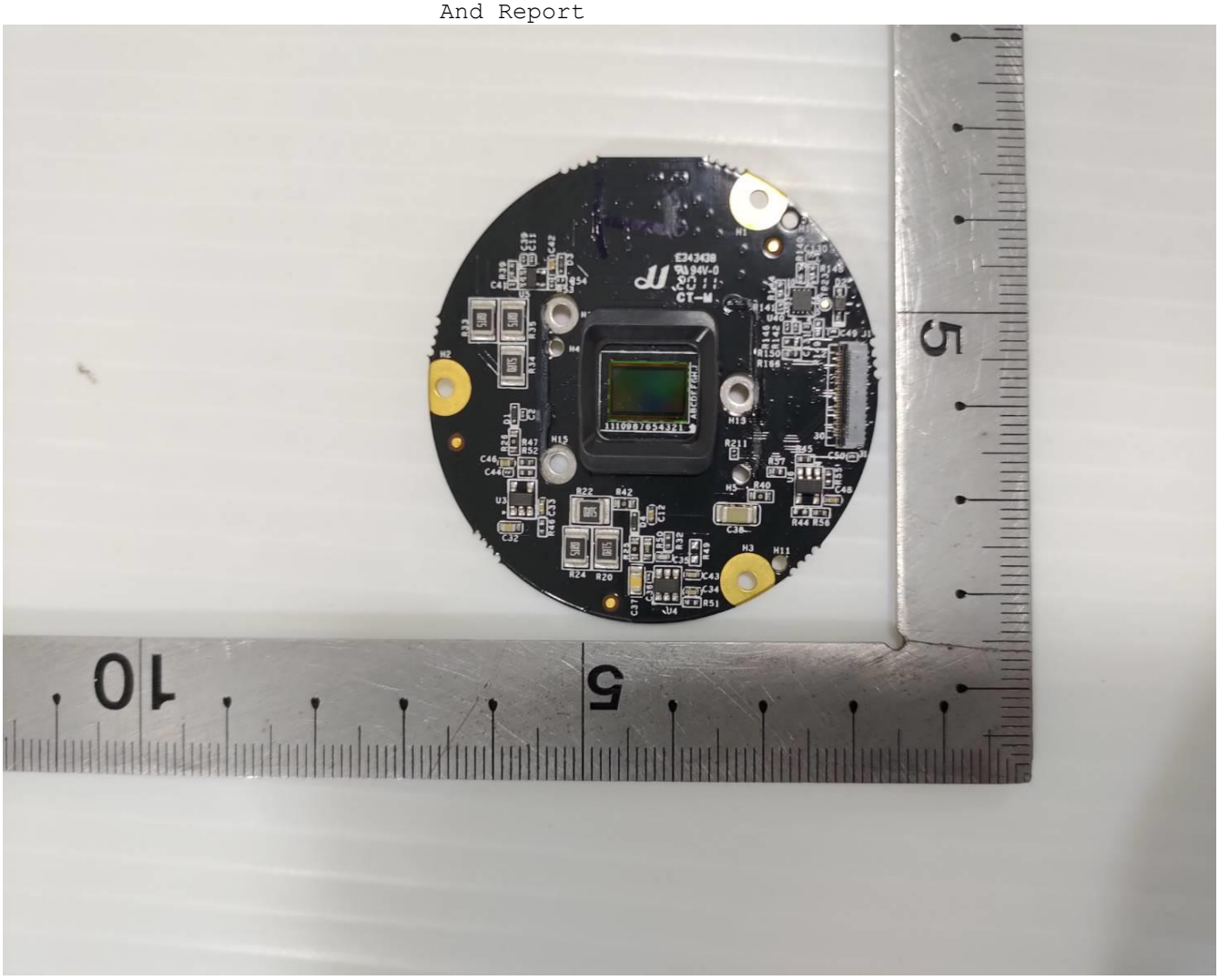
5
10
5

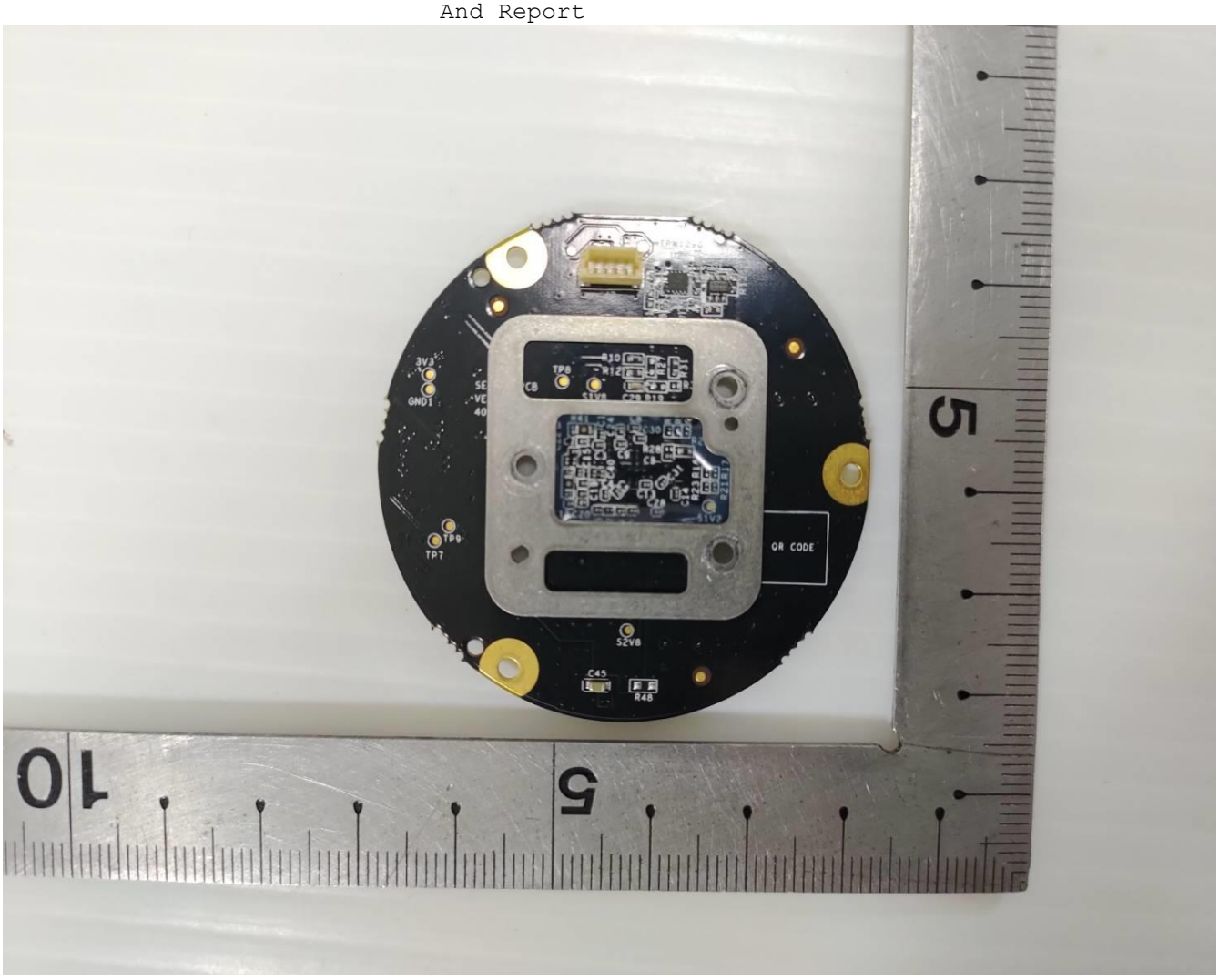
3V3
GND1
TP8
CB
S1V8
TP9
TP7
QR CODE
S2V8
C45
R48
10
5
5

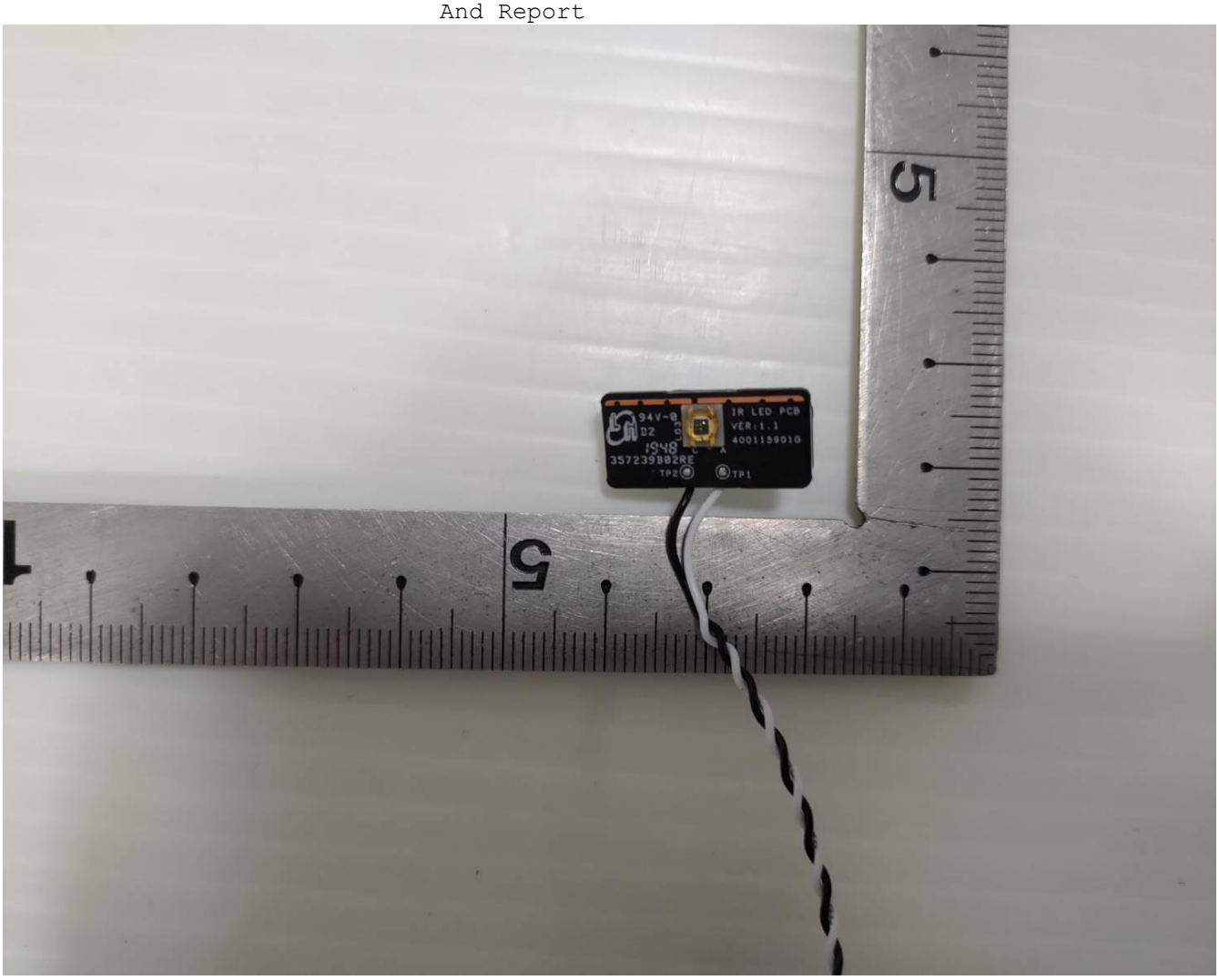
94V-0
D2
1948
3572398 02RE
TP2
TP1
IR LED PCB
VER:1.1
4001159010

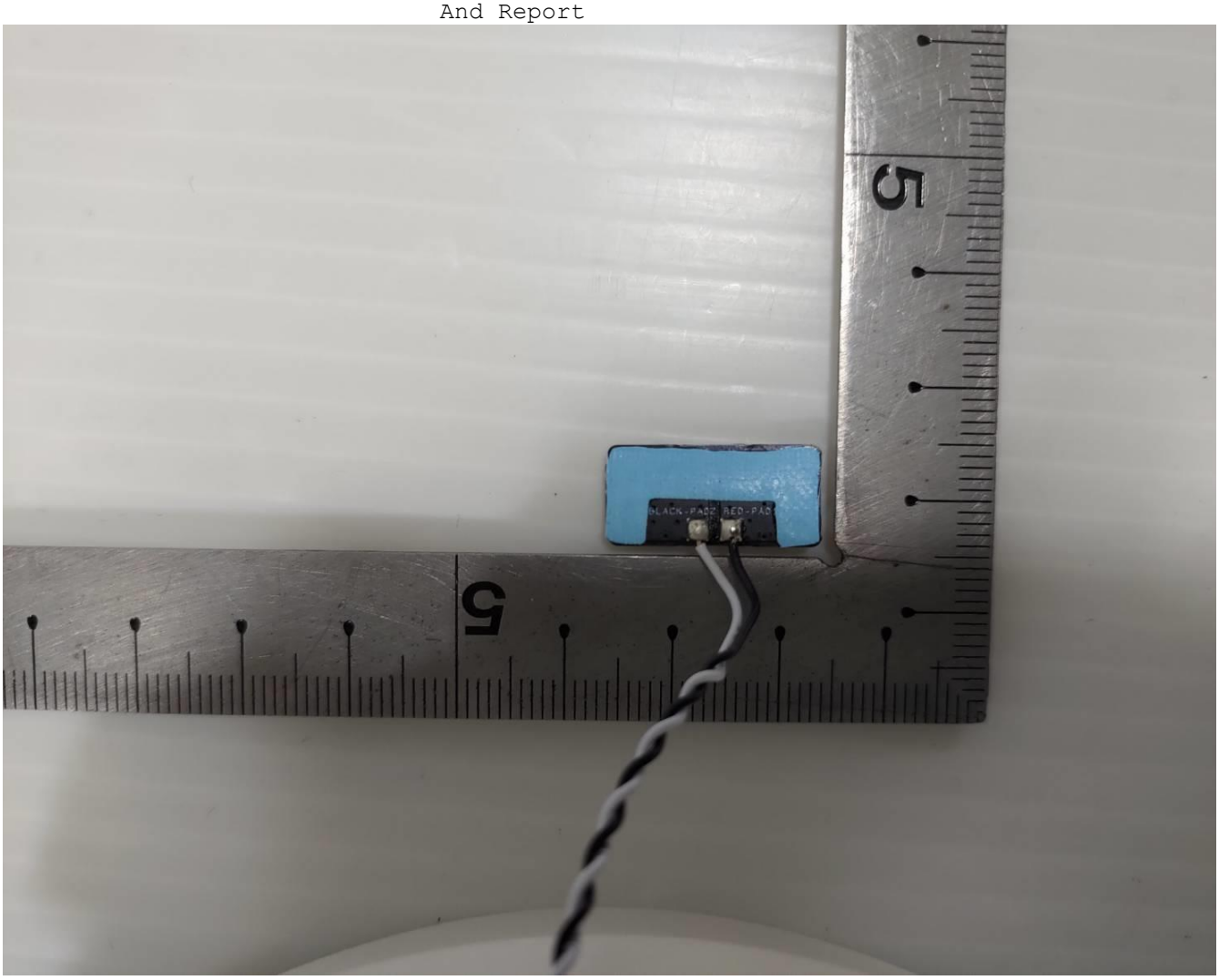
BLACK-PAD
RED-PAD

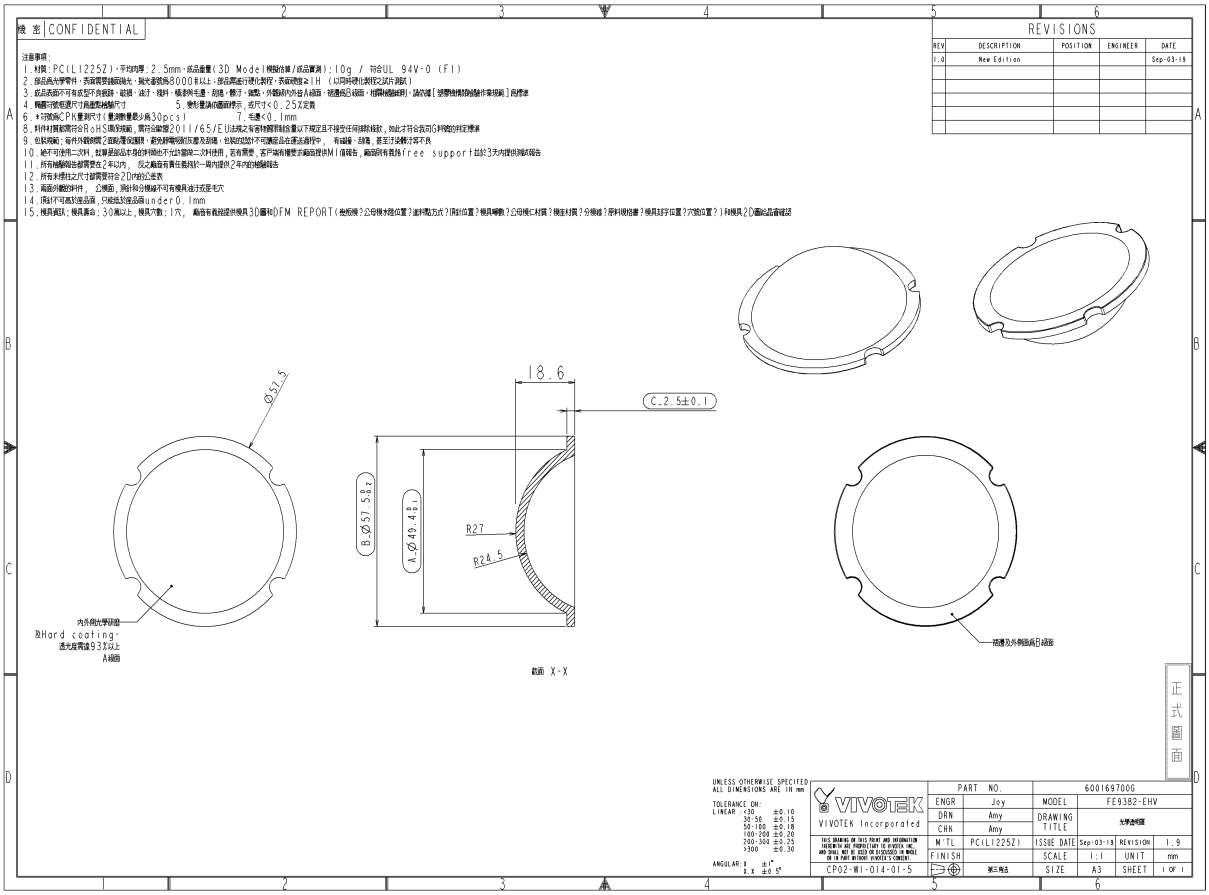
機 密 CONFIDENTIAL
REVISIONS
REV DESCRIPTION POSITION ENGINEER DATE
1.0 New Edition Sep-03-19
注意事項:
1.材質:PC(LI225Z)-平均厚:2.5mm-成品重量(3D Model模擬估算/成品實測):10g / 符合UL 94V-0 (F1)
2.成品表面光學零件-表面需要鏡面拋光-雙光束鏡角8000#以上-成品需進行硬化製程-表面硬度≥IH (以同样硬化製程之試片測試)
3.成品表面不可有浇型不良現象-起霧-波浪-流痕-模具料毛邊-刮痕-髒污-變色-外觀缺陷外形容A級面-視產品已組裝-相關檢驗細則-請洽詢【發聲物體精密組裝作業規範】為標準
4.鋼圈內壁相關尺寸為產品組裝配合尺寸 5.變形量以圓面評估,成尺寸<0.25不定義
6.*可視為CPK要測尺寸(量測數量最少為30pcs) 7.毛邊<0.1mm
8.料件材質範圍符合RoHS環保規範,需符合歐盟2011/65/EU法規之有害物質管制含量以下規定且不接受任何違禁組成,如此才符合我司Q料號的判定標準
9.包裝規範:每件外觀側面之面點需保護膜,避免靜電吸附灰塵及刮痕,包裝的過程不可讓產品在運送過程中, 有碰撞、刮傷,甚至汙染情況等不良
10.絕不可使用二次料,就算是產品本身的料頭也不允許重複二次料使用,若有需要,客戶端有權要求廠商提供ML值報告,廠商則有義務free support其於3天內提供測試報告
11.所有檢驗報告都需要在2年以內, 反之廠商有責任義務以一年內提供2年內的檢驗報告
12.所有未標註之尺寸都需要符合2D內的公差表
13.產品外觀保持性, 公模面,與相關分模線不可有模具造成的毛邊毛穴
14.限材不可高於產品面,只能低於產品面under 0.1mm
15.模具資訊:模具壽命:30萬以上,模具穴數:1穴, 廠商有義務提供模具3D圖和DFM REPORT(澆口位置?公母模水路位置?澆料點方式?頂針位置?模具導柱?公母模仁材質?模芯材質?分模線?原料規格書?模具鋼材位置?穴號位置?)和模具2D圖給品管確認
18.6
C.2.5±0.1
Ø51.5
B.Ø57.5 0.2
A.Ø49.4 0.1
R27
R24.5
內外側光學鏡面
及Hard coating-
透光度需達93%以上
A級面
截面 X-X
需遮及外側面與已組面
正式圖面
UNLESS OTHERWISE SPECIFIED
ALL DIMENSIONS ARE IN mm
TOLERANCE ON:
LINEAR: <30 ±0.10
30-50 ±0.15
50-100 ±0.18
100-200 ±0.20
200-300 ±0.25
>300 ±0.30
ANGULAR: 1 ±1°
0.1 ±0.5°
VIVOTEK
VIVOTEK Incorporated
THIS DRAWING ON THIS PAPER AND INFORMATION THEREIN IS ARE PROPRIETARY TO VIVOTEK INC. AND SHALL NOT BE USED OR DISCLOSED IN WHOLE OR IN PART WITHOUT VIVOTEK'S CONSENT.
CP02-WI-014-01-5
PART NO. 600169700G
ENGR Joy
DRN Amy
CHK Amy
MODEL FE9382-EHV
DRAWING TITLE 光學透明蓋
M'TL PC(LI225Z)
ISSUE DATE Sep-03-19
REVISION 1.9
FINISH
SCALE 1:1
UNIT mm
第三角法
SIZE A3
SHEET 1 OF 1

N202167529

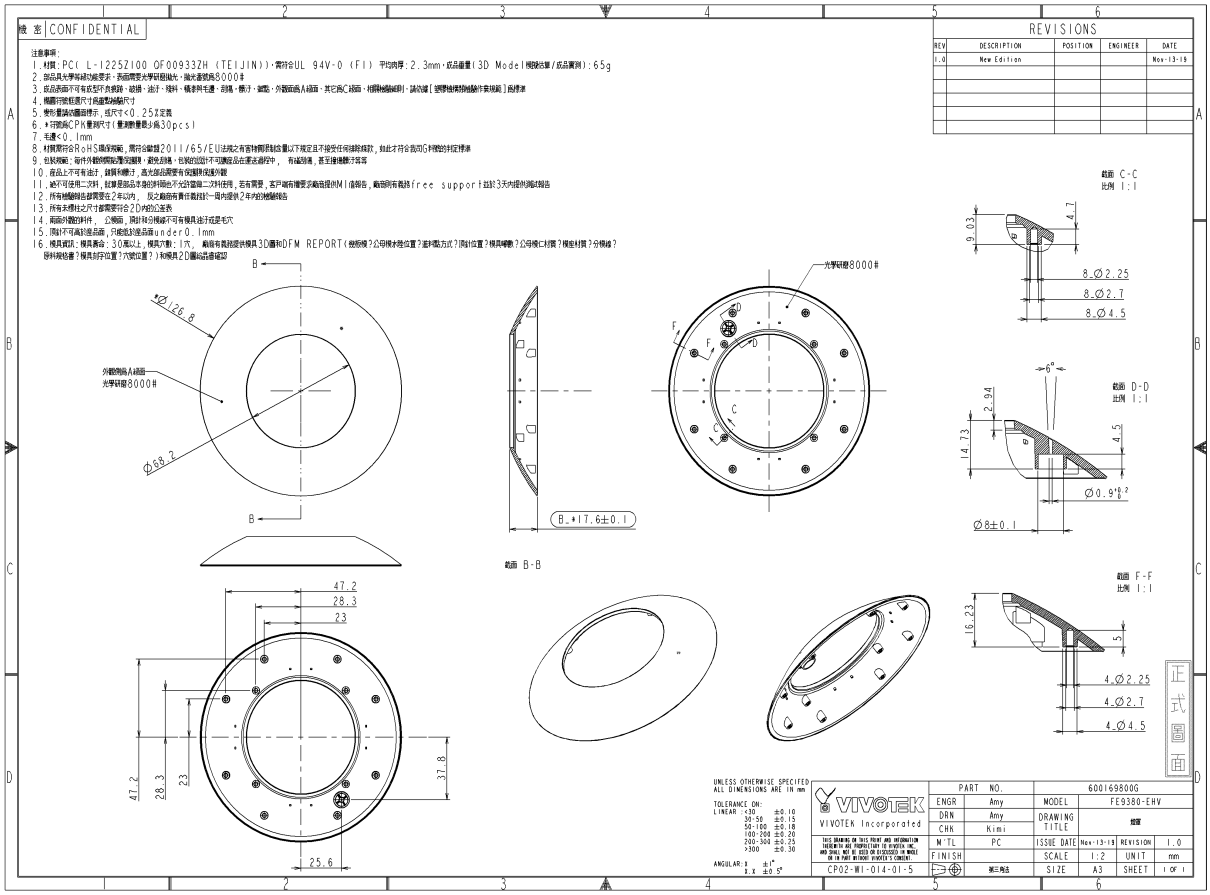
機密 CONFIDENTIAL
REVISIONS
REV DESCRIPTION POSITION ENGINEER DATE
1.0 New Edition Nov-13-19
注意事項:
1.材質:PC(L-1225Z100 OF00933ZH (TEIJIN))·需符合UL 94V-0 (FI) 平均肉厚:2.3mm·成品重量(3D Model模型估算/成品實測):65g
2.成品具光學級試驗要求,表面需要光學研磨抛光,抛光表現為8000#
3.成品表面不可有成型不良鼓路·破損·油汚·污斑·橘皮料毛邊·刮痕·擦汚·凹陷·外觀面過A級面·其它高C級面·相關機械解析·請依據【塑膠機殼外觀檢驗作業規範】執標準
4.機圖標註重尺寸為產品最終驗尺寸
5.幾何量請依圖面標示,低尺寸<0.25%定義
6.*標註為CPK量測尺寸(量測數量最少為30pcs)
7.毛邊<0.1mm
8.材質需符合RoHS環保規範,需符合歐盟2011/65/EU法規之有害物質限制含量以下規定且不接受任何特殊豁免,如此才符合我司6种塑料材料標準
9.包裝規範:每件外箱標明型號/數量/批號/日期,避免損傷,包裝的設計不可讓產品在運送過程中, 有碰撞傷,甚至連機體不保固
10.產品上不可有油汚,鍵鍵和螺汚,高光產品需要有保護膜保護外觀
11.膠不可使用二次料,就算是部品本身的料頭也不允許當做二次料使用,若有需要,客戶端有權要求廠商提供MI值報告,廠商所有義務free support十日於3天內提供測試報告
12.所有相關報告都需要在2年以內, 反之廠商有責任教授於一周內提供2年內的相關報告
13.所有未標註之尺寸都需要符合2D的公差表
14.廠商所繪的料件, 公模面,與針孔模都不可有模具油汚或是毛穴
15.預計不可為於產品面,只能成於產品面under 0.1mm
16.模具經民:模具壽命:30萬以上,模具穴數:1穴, 廠商有義務提供模具3D圖和DFM REPORT(做版線?公母模水路位置?進料澆方式?陶付位置?模具噴數?公母模口材質?模坐材質?分模線?排料規格量?模具射存位置?穴號位置?)和模具2D圖紙給產線確認
B
φ126.8
外觀側為A級面
光學研磨8000#
φ69.2
B
B_*17.6±0.1
光學研磨8000#
D
F
F
D
C
C
截面 C-C
比例 1:1
9.03
4.7
8_Ø2.25
8_Ø2.7
8_Ø4.5
截面 D-D
比例 1:1
6°
2.94
14.73
4.5
Ø0.9
Ø8±0.1
截面 B-B
47.2
28.3
23
47.2
28.3
23
37.8
25.6
截面 F-F
比例 1:1
16.23
5
4_Ø2.25
4_Ø2.7
4_Ø4.5
正式圖面
UNLESS OTHERWISE SPECIFIED
ALL DIMENSIONS ARE IN mm
TOLERANCE ON:
LINEAR: <30 ±0.10
30-50 ±0.15
50-100 ±0.18
100-200 ±0.20
200-300 ±0.25
>300 ±0.30
ANGULAR: 1 ±1°
0.1 ±0.5°
VIVOTEK
VIVOTEK Incorporated
THIS DRAWING ON THIS FRONT AND INFORMATION THEREIN IS ARE PROPRIETARY TO VIVOTEK INC. AND SHALL NOT BE USED OR DISCLOSED OR MADE OR IN PART WITHOUT VIVOTEK'S CONSENT.
CP02-WI-014-01-5
PART NO. 600169800G
ENGR Amy
DRN Amy
CHK Kimi
M'TL PC
FINISH
MODEL FE9380-EHV
DRAWING TITLE 機殼
ISSUE DATE Nov-13-19
REVISION 1.0
SCALE 1:2
UNIT mm
SIZE A3
SHEET 1 OF 1

N202167540

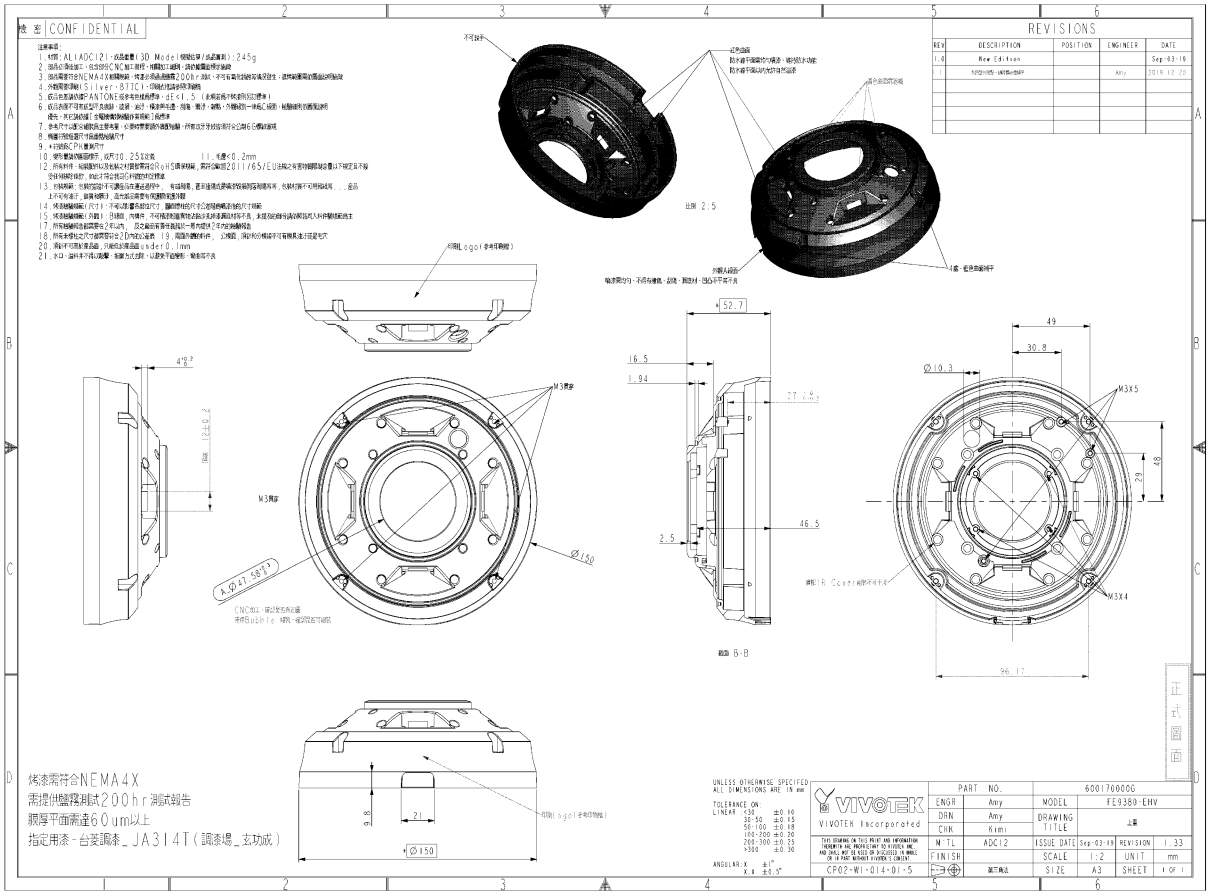
CONFIDENTIAL
REVISIONS
REV DESCRIPTION POSITION ENGINEER DATE
1.0 New Edition Sep-03-19
1.1 Amy 2019.12.25
比例 2:5
B-B
VIVOTEK Incorporated
PART NO. 6001700006
ENGR Amy
DRN Amy
CHK Kim
MODEL FE9380-EHV
DRAWING TITLE 上蓋
M'TL ADC12
ISSUE DATE Sep-03-19
REVISION 1.33
FINISH
SCALE 1:2
UNIT mm
SIZE A3
SHEET 1 OF 1
CP02-W1-014-01-5
第三角法
烤漆需符合NEMA4X
需提供鹽霧測試2200hr測試報告
鍍層平面需達60um以上
指定用漆-台菱調漆_JA314T(調漆場_玄功成)
正式圖面

N202167541

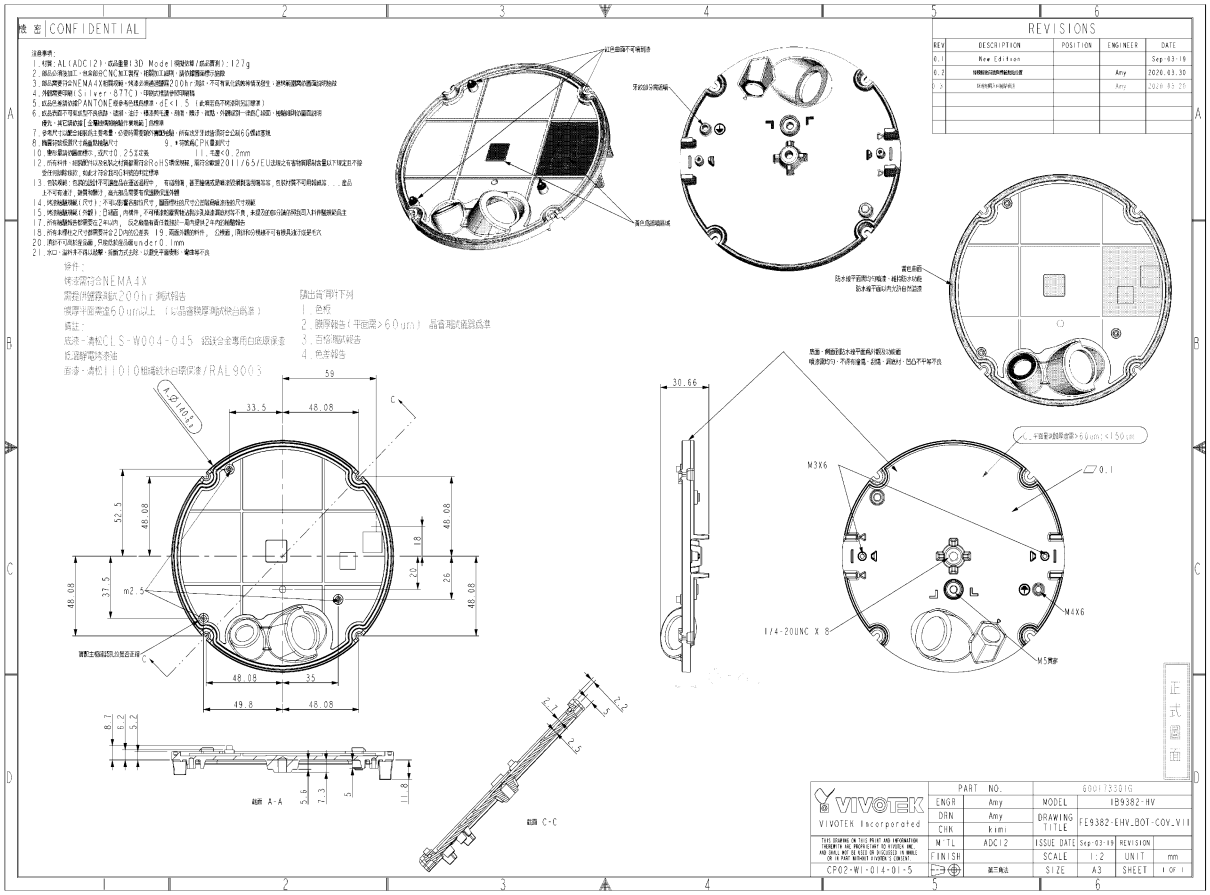
CONFIDENTIAL
REVISIONS
VIVOTEK
VIVOTEK Incorporated
PART NO.
MODEL
DRAWING TITLE
FE9382-EHV_BOT-COV_V11
ISSUE DATE
REVISION
SCALE
UNIT
SIZE
SHEET
正式圖面

N202167543

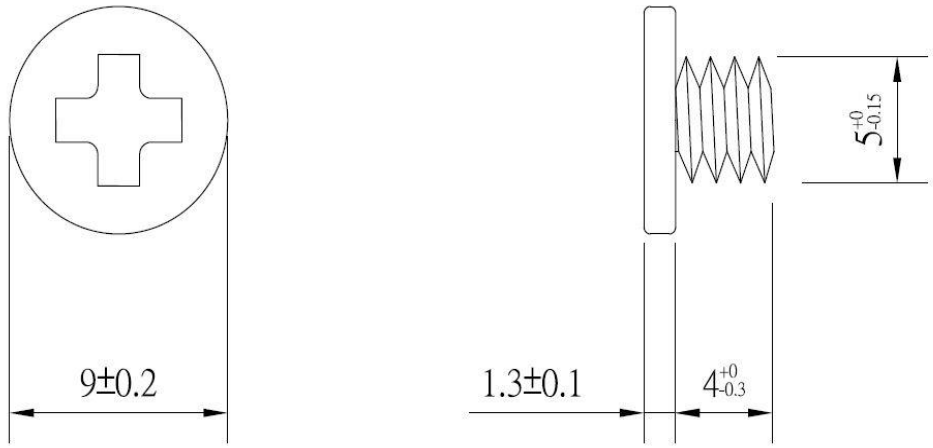

金國螺絲工業有限公司	圖名	I頭M5 X 4機械牙			圖號					
	材質	SUS	表面處理		日期	2013/08/16	單位	mm	比例	1:1

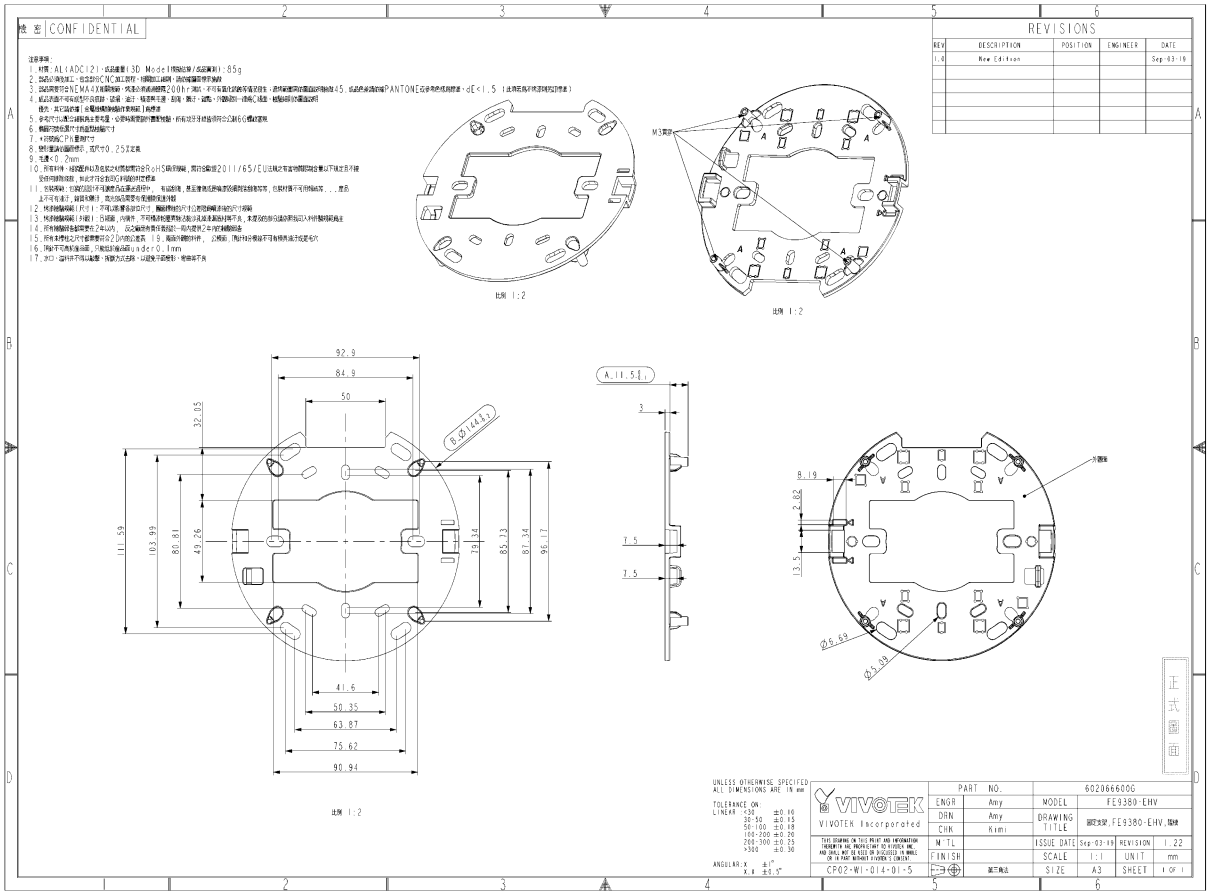
CONFIDENTIAL
REVISIONS
REV DESCRIPTION POSITION ENGINEER DATE
1.0 New Edition Sep-03-19
比例 1:2
比例 1:2
比例 1:2
92.9
84.9
50
32.05
111.59
103.99
80.81
49.26
79.34
85.13
87.34
96.17
41.6
50.35
63.87
75.62
90.94
3
7.5
7.5
8.19
2.82
13.5
外觀面
正式圖面
UNLESS OTHERWISE SPECIFIED
ALL DIMENSIONS ARE IN mm
TOLERANCE ON:
LINEAR: <30 ±0.10
30~50 ±0.15
50~100 ±0.18
100~200 ±0.20
200~300 ±0.25
>300 ±0.30
ANGULAR: X ±1°
X.X ±0.5°
VIVOTEK
VIVOTEK Incorporated
PART NO. 602066600G
ENGR Amy
DRN Amy
CHK Kimi
MODEL FE9380-EHV
DRAWING TITLE 鏡頭支架,FE9380-EHV,黑色
M'TL
FINISH
ISSUE DATE Sep-03-19
REVISION 1.22
SCALE 1:1
UNIT mm
SIZE A3
SHEET 1 OF 1
CP02-W1-014-01-5
第三角法

N202167544

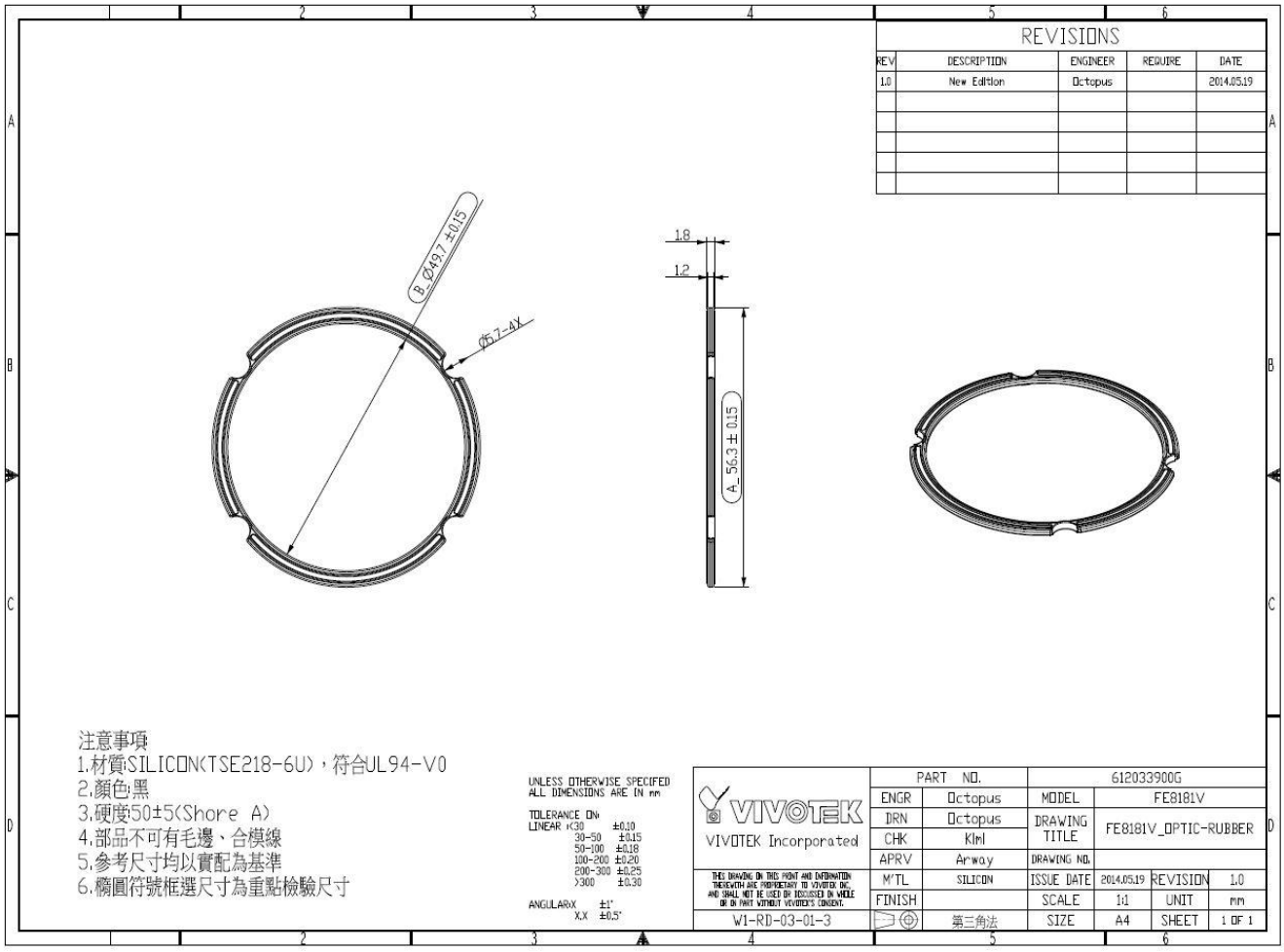
REVISIONS
REV | DESCRIPTION | ENGINEER | REQUIRE | DATE
1.0 | New Edition | Octopus | | 2014.05.19
B_Ø49.7 ±0.15
Ø5.7-4X
1.8
1.2
A_56.3 ± 0.15
注意事項:
1.材質:SILICON(TSE218-6U)，符合UL94-V0
2.顏色:黑
3.硬度:50±5(Shore A)
4.部品不可有毛邊、合模線
5.參考尺寸均以實配為基準
6.橢圓符號框選尺寸為重點檢驗尺寸
UNLESS OTHERWISE SPECIFED
ALL DIMENSIONS ARE IN mm
TOLERANCE ON:
LINEAR <30 ±0.10
30-50 ±0.15
50-100 ±0.18
100-200 ±0.20
200-300 ±0.25
>300 ±0.30
ANGULAR:X ±1°
X.X ±0.5°
VIVOTEK
VIVOTEK Incorporated
THIS DRAWING ON THIS PAGE AND INFORMATION THEREWITH ARE PROPRIETARY TO VIVOTEK INC. AND SHALL NOT BE USED OR REDISCLOSED IN WHOLE OR IN PART WITHOUT VIVOTEK'S CONSENT.
W1-RD-03-01-3
PART NO. 612033900G
ENGR Octopus
DRN Octopus
CHK Kim
APRV Arway
M'TL SILICON
FINISH
第三角法
MODEL FE8181V
DRAWING TITLE FE8181V_OPTIC-RUBBER
DRAWING NO.
ISSUE DATE 2014.05.19
REVISION 1.0
SCALE 1:1
UNIT mm
SIZE A4
SHEET 1 OF 1

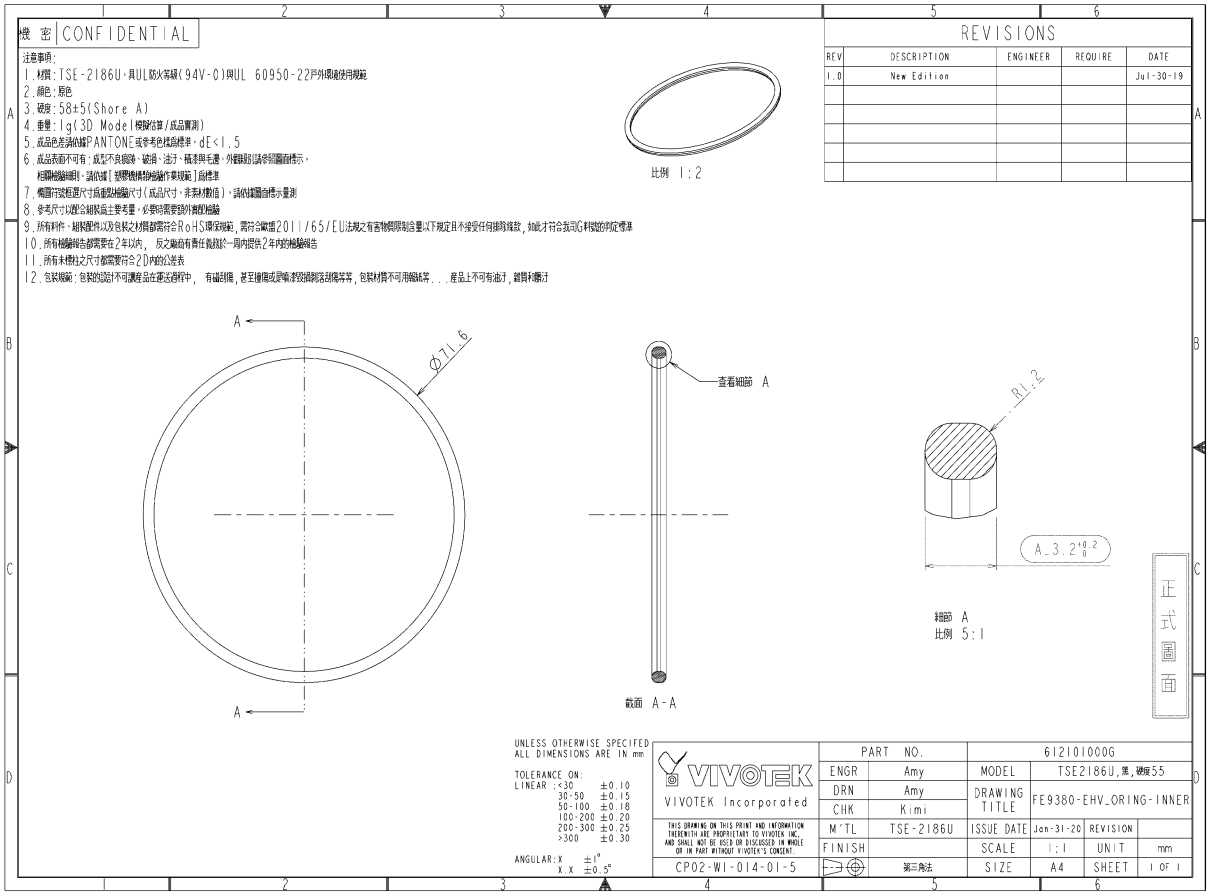
機 密 CONFIDENTIAL
注意事項:
1.材質:TSE-2186U,具UL防火等級(94V-0)與UL 60950-22戶外環境使用規範
2.顏色:原色
3.硬度:58±5(Shore A)
4.重量:1g(3D Model模擬估算/成品實測)
5.成品色差請依據PANTONE或參考色樣品標準,dE<1.5
6.成品表面不可有:成型不良缺陷、破損、油污、積塵與毛邊,外觀部位請參照圖面標示,
相關檢驗細則,請依據【類環境檢驗作業規範】辦理
7.機圖所號框選尺寸為產品檢驗尺寸(成品尺寸,非表示標值),請依據圖面標示量測
8.參考尺寸以配合組裝為主要考量,必要時需要額外測繪檢驗
9.所有零件,組裝配件以及包裝之材質都需符合RoHS環保規範,需符合歐盟2011/65/EU法規之有害物質限制含量以下規定且不接受任何豁免條款,如此才符合我司&利益的約定標準
10.所有檢驗報告都需要在2年以內, 反之廠商有責任負責於一周內提供2年內的檢驗報告
11.所有未標註之尺寸都需要符合2D內的公差表
12.包裝規範:包裝的設計不可讓產品在運送過程中, 有碰撞機,甚至撞擊或壓縮,導致損傷或破壞等等,包裝材質不可用廢紙等...產品上不可有油汙,銷貨不標汙
REVISIONS
REV DESCRIPTION ENGINEER REQUIRE DATE
1.0 New Edition Jul-30-19
比例 1:2
A
Ø71.6
查看細節 A
R1.2
A_3.2 +0.2 0
細節 A
比例 5:1
截面 A-A
正式圖面
UNLESS OTHERWISE SPECIFED
ALL DIMENSIONS ARE IN mm
TOLERANCE ON:
LINEAR :<30 ±0.10
30-50 ±0.15
50-100 ±0.18
100-200 ±0.20
200-300 ±0.25
>300 ±0.30
ANGULAR:X ±1°
X.X ±0.5°
VIVOTEK
VIVOTEK Incorporated
THIS DRAWING ON THIS PRINT AND INFORMATION THEREWITH ARE PROPRIETARY TO VIVOTEK INC. AND SHALL NOT BE USED OR DISCLOSED IN WHOLE OR IN PART WITHOUT VIVOTEK'S CONSENT.
CP02-WI-014-01-5
PART NO. 612101000G
ENGR Amy
DRN Amy
CHK Kimi
M'TL TSE-2186U
FINISH
第三角法
MODEL TSE2186U,黑,硬度55
DRAWING TITLE FE9380-EHV_ORING-INNER
ISSUE DATE Jan-31-20
REVISION
SCALE 1:1
UNIT mm
SIZE A4
SHEET 1 OF 1

N202167546

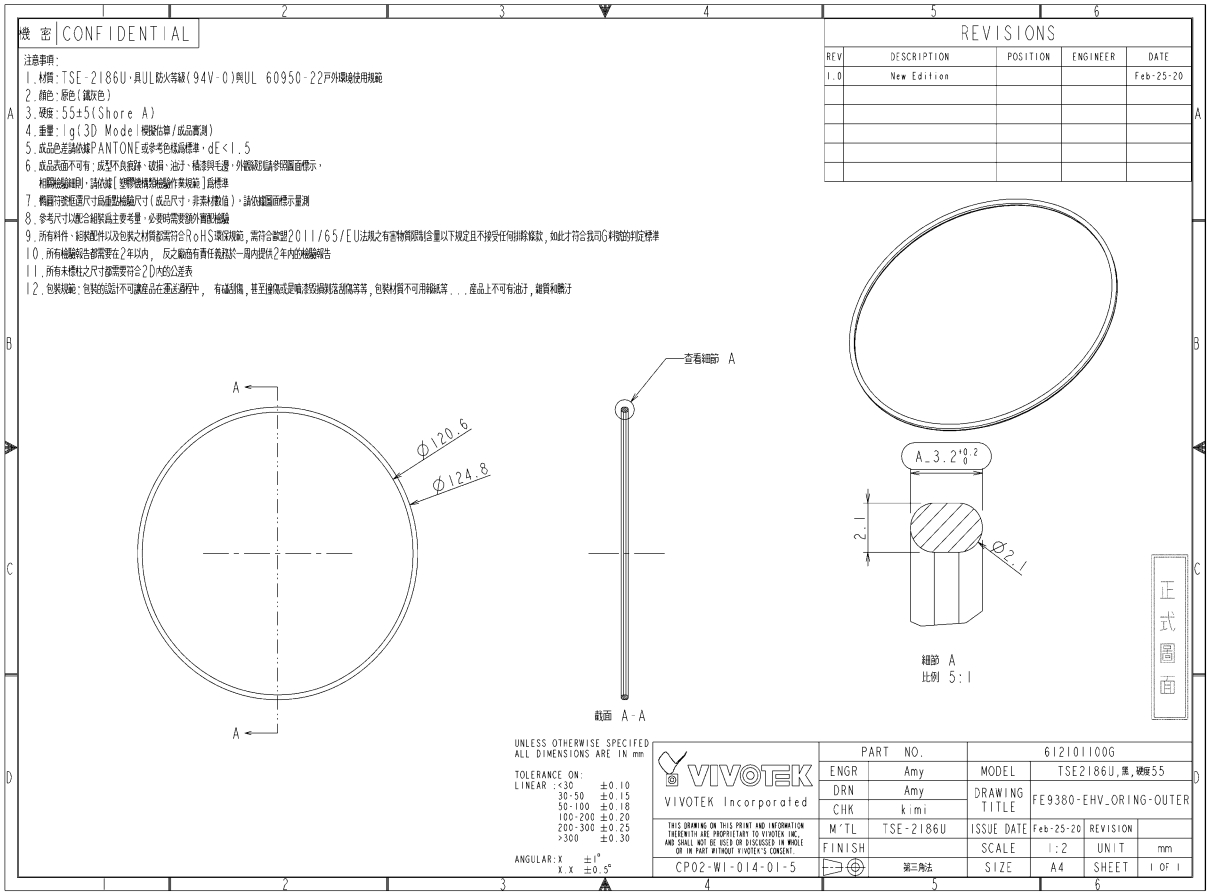
機 密 CONFIDENTIAL
REVISIONS
REV DESCRIPTION POSITION ENGINEER DATE
1.0 New Edition Feb-25-20
注意事項:
1.材質:TSE-2186U,具UL防火等級(94V-0)與UL 60950-22戶外環境使用規範
2.顏色:原色(鐵灰色)
3.硬度:55±5(Shore A)
4.重量:1g(3D Model模擬估算/成品實測)
5.成品色差請依據PANTONE或參考色樣品標準,dE<1.5
6.成品表面不可有:成型不良銀痕、破損、油污、橘漆與毛邊,外觀規範請參照圖面標示,
相關檢驗細則,請依據【塑膠橡膠類檢驗作業規範】為標準
7.機器可變框選尺寸為產型檢驗尺寸(成品尺寸,非素材數值),請依據圖面標示量測
8.參考尺寸以產合組裝為主要考量,必要時需要額外實配檢驗
9.所有料件、組裝配件以及包裝之材質都需符合RoHS環保規範,需符合歐盟2011/65/EU法規之有害物質限制含量以下規定且不接受任何排除條款,如此才符合貴司G料號的判定標準
10.所有檢驗報告都需要在2年以內, 反之廠商有責任義務於一周內提供2年內的檢驗報告
11.所有未標註之尺寸都需要符合2D水的公差表
12.包裝規範:包裝的設計不可讓產品在運送過程中, 有磨損傷,甚至壓傷或受壓迫變形損壞或刮傷等等,包裝材質不可用鞋蓋,...產品上不可有油污,雜質和髒污
查看細節 A
A
A
Ø120.6
Ø124.8
截面 A-A
A_3.2+0.2 0
2.1
Ø2.1
細節 A
比例 5:1
正式圖面
UNLESS OTHERWISE SPECIFIED
ALL DIMENSIONS ARE IN mm
TOLERANCE ON:
LINEAR :<30 ±0.10
30-50 ±0.15
50-100 ±0.18
100-200 ±0.20
200-300 ±0.25
>300 ±0.30
ANGULAR:X ±1°
X.X ±0.5°
VIVOTEK
VIVOTEK Incorporated
THIS DRAWING ON THIS PRINT AND INFORMATION THEREWITH ARE PROPRIETARY TO VIVOTEK INC. AND SHALL NOT BE USED OR DISCLOSED IN WHOLE OR IN PART WITHOUT VIVOTEK'S CONSENT.
CP02-WI-014-01-5
PART NO. 6121011006
ENGR Amy
DRN Amy
CHK kimi
M'TL TSE-2186U
FINISH
第三角法
MODEL TSE2186U,黑,硬度55
DRAWING TITLE FE9380-EHV_ORING-OUTER
ISSUE DATE Feb-25-20
REVISION
SCALE 1:2
UNIT mm
SIZE A4
SHEET 1 OF 1

N202167547

機 密 CONFIDENTIAL

REVISIONS

REV	DESCRIPTION	POSITION	ENGINEER	DATE
1.0	New Edition			Feb-25-20

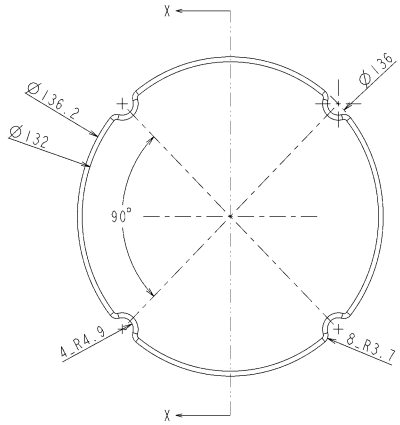

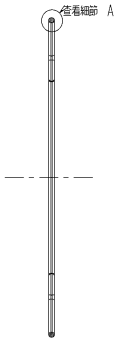

截面 X-X

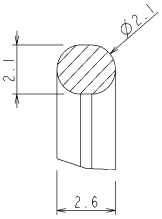

細節 A
比例 5:1

注意事項:
1.材質:TSE-2186U,具UL防火等級(94V-0)與UL 60950-22戶外環境使用規範
2.顏色:原色(鐵灰色)
3.硬度:55±5(Shore A)
4.重量:1g(3D Model模擬估算/成品實測)
5.成品色差請依據PANTONE或參考色樣品標準,dE<1.5
6.成品表面不可有:成型不良痕跡、破損、油汙、橡膠與毛邊、外觀設計品未照圖面標示、相關檢驗驗證則、請依據[塑膠機構點檢驗作業規範]品管標準
7.機圖符號框選尺寸為產品驗尺寸(成品尺寸,非素材數值),請依據圖面標示量測
8.參考尺寸以配合組裝品主要考量,必要時需要額外圖面檢驗
9.所有料件、組裝配件以及包裝之材質都需符合RoHS環保規範,需符合歐盟2011/65/EU法規之有害物質限值檢量以下規定且不接受任何豁免條款,如此才符合我司G料號的判定標準
10.所有檢驗報告都需要在2年以內, 反之廠商有責任義務於一周內提供2年內的檢驗報告
11.所有未標註之尺寸都需要符合2D內的公差表
12.包裝規範:包裝的過程不可讓產品在運送過程中, 有碰刮傷,甚至撞傷或是噴漆脫落刮傷等等,包裝材質不可用解結等...產品上不可有油汙,雜質和髒汙

UNLESS OTHERWISE SPECIFED
ALL DIMENSIONS ARE IN mm

TOLERANCE ON:
LINEAR :<30 ±0.10
30-50 ±0.15
50-100 ±0.18
100-200 ±0.20
200-300 ±0.25
>300 ±0.30

ANGULAR: X ±1°
X.X ±0.5°

VIVOTEK
VIVOTEK Incorporated

THIS DRAWING ON THIS PRINT AND INFORMATION THEREWITH ARE PROPRIETARY TO VIVOTEK INC. AND SHALL NOT BE USED OR DISCLOSED IN WHOLE OR IN PART WITHOUT VIVOTEK'S CONSENT.

CP02-WI-014-01-5

PART NO.		6121009006			
ENGR	Amy	MODEL	TSE2186U,黑,硬度55		
DRN	Amy	DRAWING TITLE	FE9380-EHV-O-RING-BOT		
CHK	Kimi				
M'TL	TSE-2186U	ISSUE DATE	Feb-25-20	REVISION	
FINISH		SCALE	1:2	UNIT	mm
	第三角法	SIZE	A4	SHEET	1 OF 1

N202167531

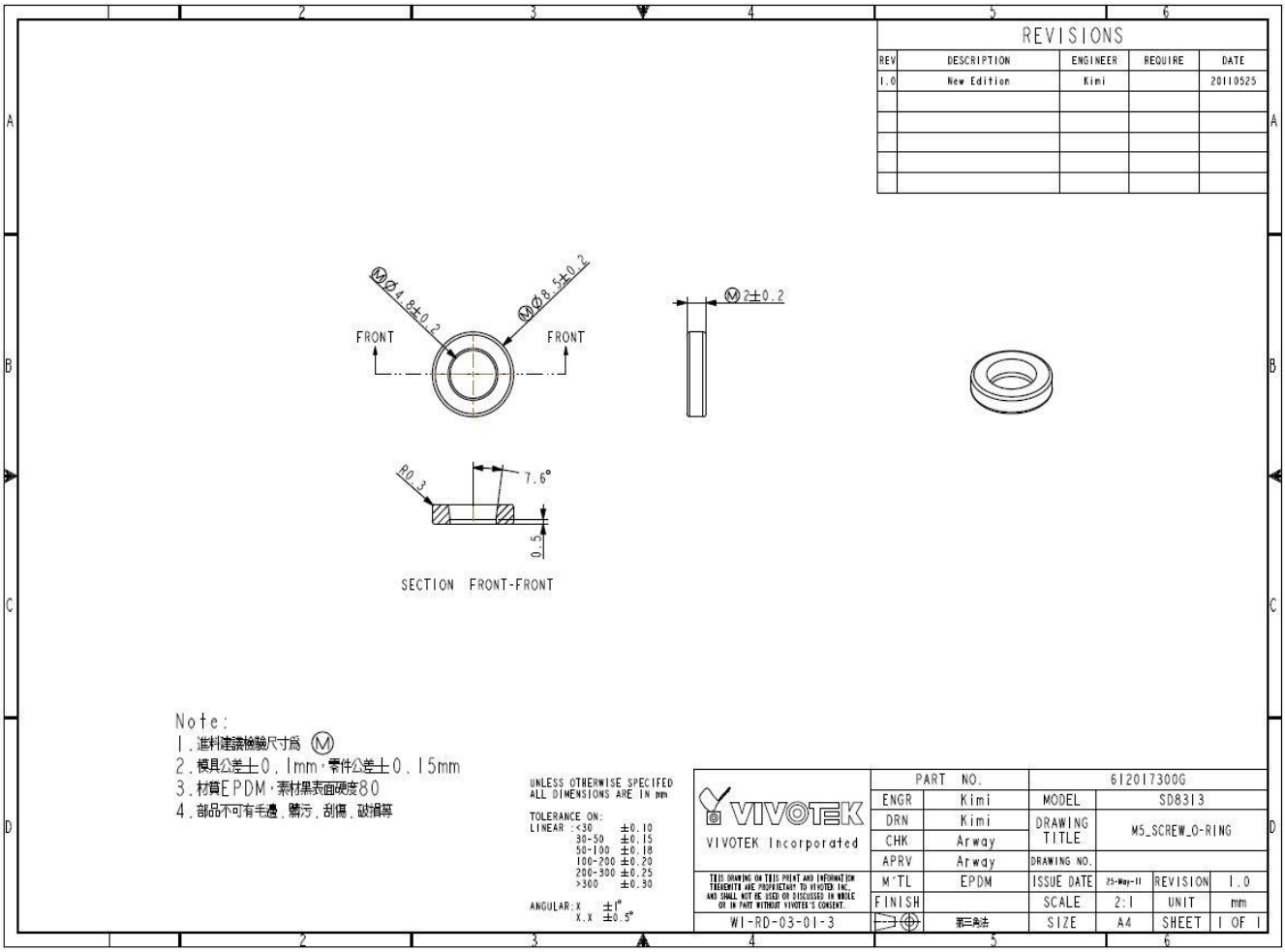
REVISIONS
REV DESCRIPTION ENGINEER REQUIRE DATE
1.0 New Edition Kimi 20110525
Ⓜ Ø4.8±0.2
Ⓜ Ø8.5±0.2
FRONT
FRONT
Ⓜ 2±0.2
R0.3
7.6°
0.5
SECTION FRONT-FRONT
Note:
1.進料建議檢驗尺寸為 Ⓜ
2.模具公差±0.1mm,零件公差±0.15mm
3.材質EPDM,素材黑表面硬度80
4.部品不可有毛邊,髒污,刮傷,破損等
UNLESS OTHERWISE SPECIFED
ALL DIMENSIONS ARE IN mm
TOLERANCE ON:
LINEAR :<30 ±0.10
30-50 ±0.15
50-100 ±0.18
100-200 ±0.20
200-300 ±0.25
>300 ±0.30
ANGULAR: X ±1°
X.X ±0.5°
VIVOTEK
VIVOTEK Incorporated
THIS DRAWING OR THIS PRINT AND INFORMATION THEREWITH ARE PROPRIETARY TO VIVOTEK INC. AND SHALL NOT BE USED OR DISCUSSED IN WHOLE OR IN PART WITHOUT VIVOTEK'S CONSENT.
WI-RD-03-01-3
PART NO. 612017300G
ENGR Kimi
DRN Kimi
CHK Arway
APRV Arway
M'TL EPDM
FINISH
第三角法
MODEL SD8313
DRAWING TITLE M5_SCREW_O-RING
DRAWING NO.
ISSUE DATE 25-May-11
REVISION 1.0
SCALE 2:1
UNIT mm
SIZE A4
SHEET 1 OF 1

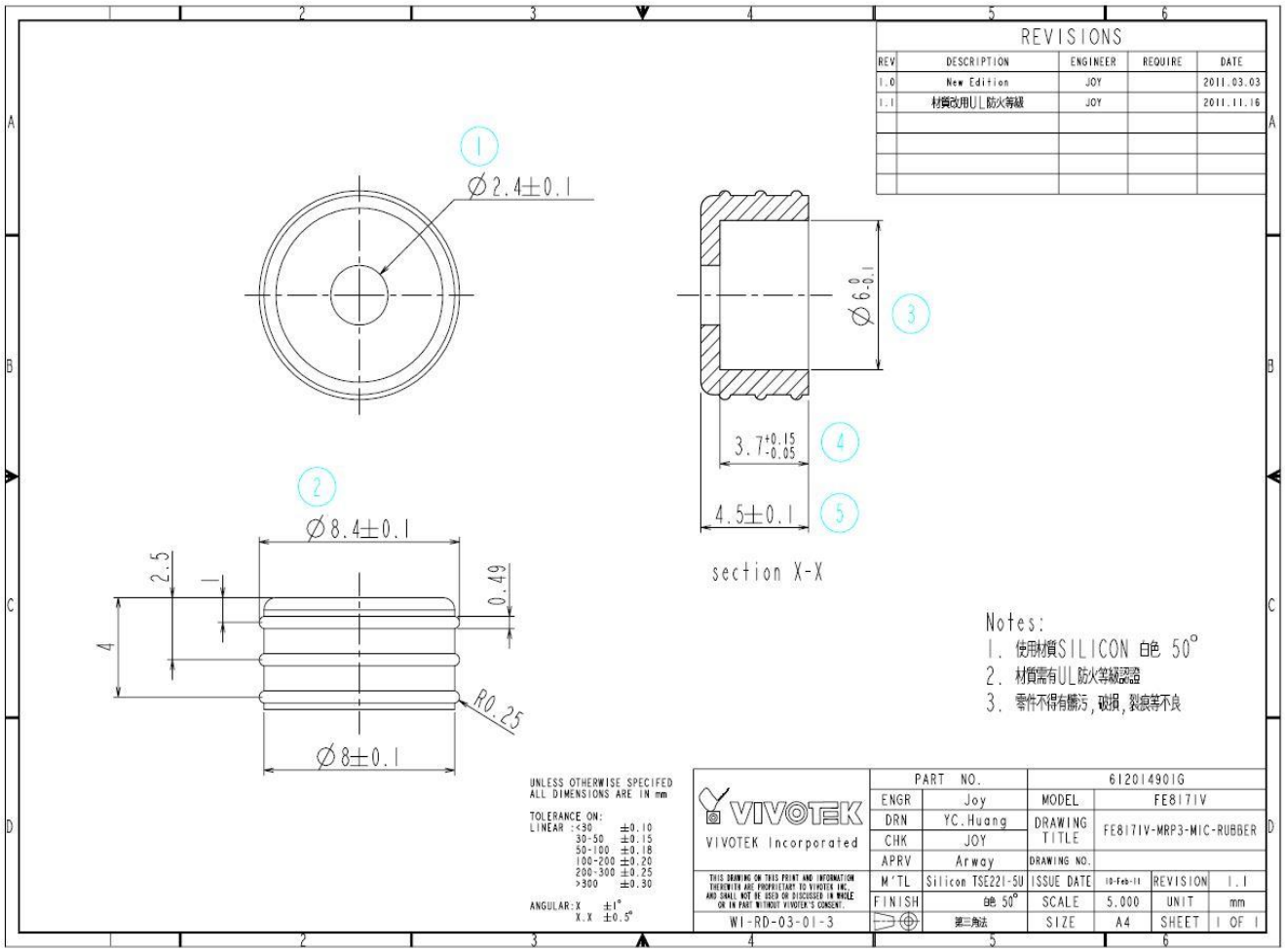
REVISIONS
REV DESCRIPTION ENGINEER REQUIRE DATE
1.0 New Edition JOY 2011.03.03
1.1 材質改用UL防火等級 JOY 2011.11.16
Ø2.4±0.1
Ø6-0.1 0
3.7 +0.15 -0.05
4.5±0.1
section X-X
Ø8.4±0.1
2.5
1
0.49
4
R0.25
Ø8±0.1
Notes:
1. 使用材質SILICON 白色 50°
2. 材質需有UL防火等級認證
3. 零件不得有髒污,破損,裂痕等不良
UNLESS OTHERWISE SPECIFED
ALL DIMENSIONS ARE IN mm
TOLERANCE ON:
LINEAR :<30 ±0.10
30-50 ±0.15
50-100 ±0.18
100-200 ±0.20
200-300 ±0.25
>300 ±0.30
ANGULAR:X ±1°
X.X ±0.5°
VIVOTEK
VIVOTEK Incorporated
THIS DRAWING ON THIS PRINT AND INFORMATION THEREWITH ARE PROPRIETARY TO VIVOTEK INC. AND SHALL NOT BE USED OR DISCLOSED IN WHOLE OR IN PART WITHOUT VIVOTEK'S CONSENT.
WI-RD-03-01-3
PART NO. 6120149016
ENGR Joy
DRN YC.Huang
CHK JOY
APRV Arway
M'TL Silicon TSE221-5U
FINISH 白色 50°
第三角法
MODEL FE8171V
DRAWING TITLE FE8171V-MRP3-MIC-RUBBER
DRAWING NO.
ISSUE DATE 10-Feb-11
REVISION 1.1
SCALE 5.000
UNIT mm
SIZE A4
SHEET 1 OF 1

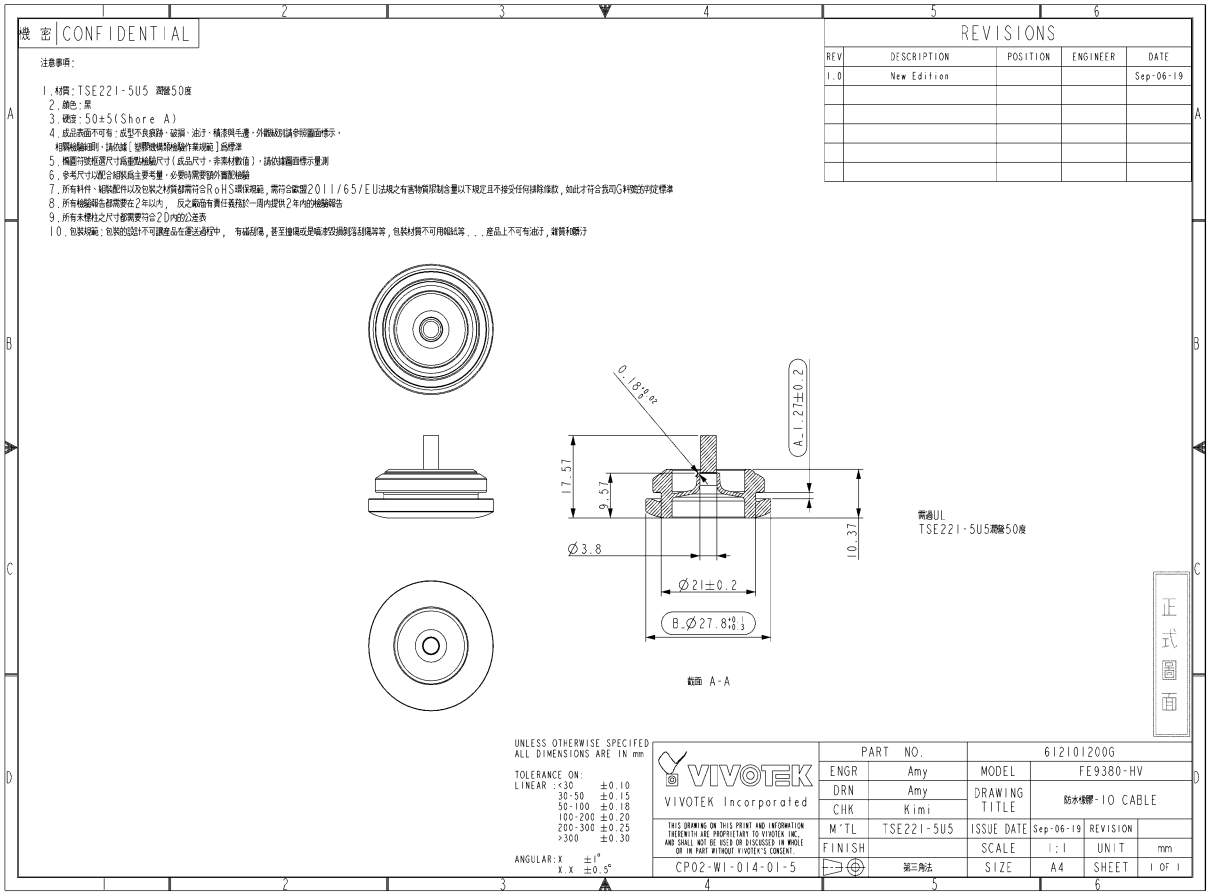
機 密 CONFIDENTIAL
REVISIONS
REV DESCRIPTION POSITION ENGINEER DATE
1.0 New Edition Sep-06-19
注意事項:
1.材質:TSE221-5U5 邵氏50度
2.顏色:黑
3.硬度:50±5(Shore A)
4.成品表面不可有:成型不良氣孔、破損、油汙、精油與毛邊、外觀缺陷請參照圖面標示,
相關檢驗標準:請依據【發標檢驗部檢驗作業規範】為標準
5.機圖尺寸為相選尺寸為產品檢驗尺寸(成品尺寸,非素材數值),請依據圖面標示量測
6.參考尺寸以配合組裝為主要考量,必要時需要做外觀檢驗
7.所有料件、組裝配件以及包裝之材質都需符合RoHS環保規範,需符合歐盟2011/65/EU法規之有害物質限制含量以下規定且不接受任何請除條款,如此才符合我司G科技法規標準
8.所有檢驗報告都需要在2年以內, 反之廠商有責任義務於一周內提供2年內的檢驗報告
9.所有未標註之尺寸都需要符合2D內的公差表
10.包裝規範:包裝的設計不可讓產品在運送過程中, 有碰撞傷,甚至壓縮或是噴漆發霉刮傷刮痕等等,包裝材質不可用膠帶等,,,產品上不可有油汙,雜質和髒汙
0.18+0.02
A-1.27±0.2
17.57
9.57
10.37
Ø3.8
Ø21±0.2
B-Ø27.8+0.1 -0.3
需過UL
TSE221-5U5邵氏50度
截面 A-A
正式圖面
UNLESS OTHERWISE SPECIFED
ALL DIMENSIONS ARE IN mm
TOLERANCE ON:
LINEAR :<30 ±0.10
30-50 ±0.15
50-100 ±0.18
100-200 ±0.20
200-300 ±0.25
>300 ±0.30
ANGULAR:X ±1°
X.X ±0.5°
VIVOTEK
VIVOTEK Incorporated
THIS DRAWING ON THIS PRINT AND INFORMATION THEREWITH ARE PROPRIETARY TO VIVOTEK INC. AND SHALL NOT BE USED OR DISCLOSED IN WHOLE OR IN PART WITHOUT VIVOTEK'S CONSENT.
CP02-W1-014-01-5
PART NO. 612101200G
ENGR Amy
DRN Amy
CHK Kimi
MODEL FE9380-HV
DRAWING TITLE 防水連接-IO CABLE
M'TL TSE221-5U5
ISSUE DATE Sep-06-19
REVISION
FINISH
SCALE 1:1
UNIT mm
第三角法
SIZE A4
SHEET 1 OF 1

N202167532

機 密 CONFIDENTIAL

注意事項:
1.材質:TSE-2186U
2.顏色:原色(銀灰)
3.硬度:55±5(Shore A)
4.成品表面不可有:成型不良痕跡、破損、油汙、積塵與毛邊、外觀缺刮請參照圖面標示,
相關檢驗細則,請依據【塑膠橡膠檢驗作業規範】做標準
5.機圖所號相關尺寸為產品檢驗尺寸(成品尺寸,非模具數值),請依據圖面標示量測
6.參考尺寸以配合組裝為主要考量,必要時需要額外實測檢驗
7.所有料件、組裝配件以及包裝之材質都需符合RoHS環保規範,需符合歐盟2011/65/EU法規之有害物質限制含量以下規定且不接受任何排除條款,如此才符合貴司C料號認評定標準
8.所有檢驗報告都需要在2年以內, 反之廠商有責任義務於一周內提供2年內的檢驗報告
9.所有未標註之尺寸都需要符合2D內的公差表
10.包裝規範:包裝的設計不可讓產品在產送過程中, 有磨刮痕,甚至撞傷或是輻射受損觸電短路等等,包裝材質不可用麻絲等...產品上不可有油汙,鐵質和膠汙

REVISIONS

REV	DESCRIPTION	POSITION	ENGINEER	DATE
1.0	New Edition			Mar-10-20

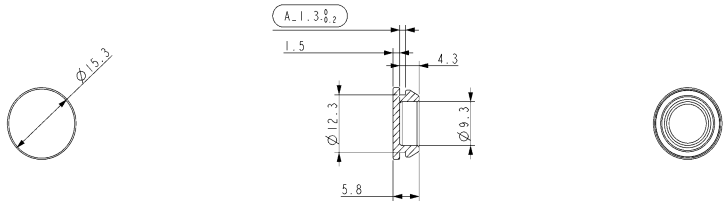

截面 B-B

正式圖面

VIVOTEK Incorporated

THIS DRAWING ON THIS PRINT AND INFORMATION THEREWITH ARE PROPRIETARY TO VIVOTEK INC. AND SHALL NOT BE USED OR DISCLOSED IN WHOLE OR IN PART WITHOUT VIVOTEK'S CONSENT.

CP02-W1-014-01-5

PART NO.		612107200G			
ENGR	Amy	MODEL	FE9382-EHV-V2		
DRN	Amy	DRAWING TITLE	FE9382-EHV-V2-10-RUBBER		
CHK	Kimi				
M'TL	TSE-2186U	ISSUE DATE	Mar-10-20	REVISION	1.0
FINISH		SCALE	1:1	UNIT	mm
	第三角法	SIZE	A4	SHEET	1 OF 1

N202167534

SMD PoE Transformers
P/N: MTSE018

Feature

- EN60950 Basic insulation compliant-250Vrms
- RoHS Compliance Product
- Operating temperature range:-40° C to +125° C
- Storage temperature range:-40° C to +125° C

Electrical Specifications @ 25℃										
Part Number	OCL (250KHz，0.1V)	LL (250KHz，0.1V)	DCR			Turn Ratio (15.7KHz,0.1V)		OCL (100KHz，0.3V)	SECONDARY OUTPUT	Hi-Pot VAC
	1,2-12,11	1,2-12,11 (tie 3,10,5,6,7,8)	1,2-12,11	3-10	5,6-7,8	1,2-12,11:5,6-7,8	1,2-12,11:3-10	PRI (AT 2.0A)	5,6-8,7	PRI TO SEC (0.5mA/3S)
MTSE018	35uH±10%	0.6 uH max	95mΩMAX	0.15ΩMAX	17mΩMAX	1:0.35	1:0.35	31.5uH MIN	12V 1.1A	1500

Schematic

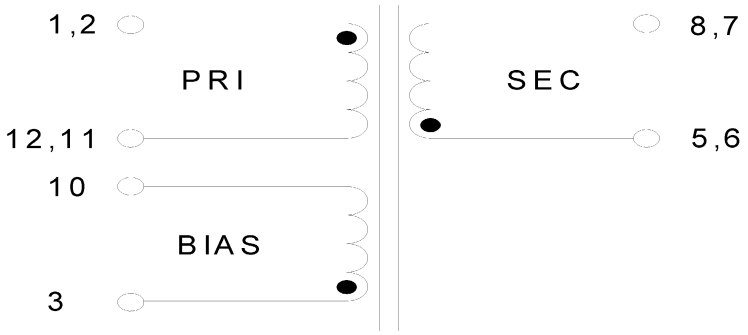

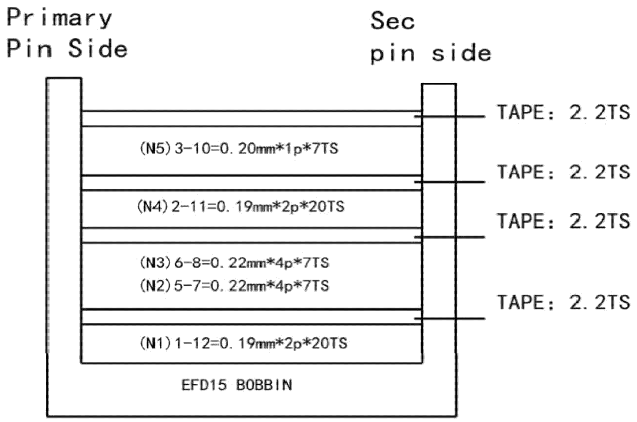

Overview

VIVOTEK's FE9382 is an H.265 fisheye fixed dome network cameras, featuring a detailed 6-Megapixel CMOS sensor that produces superb image clarity. By employing H.265 compression technology and VIVOTEK's Smart Stream III technology, these cameras can reduce both bandwidth and storage consumption by up to 80%* while retaining the highest standard of image quality.

Equipped with a fisheye lens for 180° panoramic view (wall mount) or 360° surround view (ceiling/floor mount) with zero blind spots, the cameras are able to provide coverage of wide, open areas, such as airports, shopping malls, retail stores, offices and more.

The camera is equipped with a removable IR-cut filter and WDR Pro technology, empowering the cameras to maintain optimal image quality around the clock and unparalleled visibility in high-contrast lighting environments. Moreover, the cameras are designed with full EN50155 compliance, vandal-proof IK10-rated, and weather-proof IP66-rated housing, ensuring that the camera can withstand shock, vibration, humidity, dust, and temperature fluctuations, and maintain stable and reliable video capture during vehicle movement.

* Depending on scene being monitored.

Revision History

Rev. 1.0: Initial release.

セキュリティ基準（新規則第34条の10）
「本製品は　電気通信事業者（移動通信会社、固定通信会社、インターネットプロバイダ等）の通信回線（公衆無線 LAN を含む　）
に直接接続することができません。本製品をインターネットに接続する場合は、必ずルータ等を経由し接続してください。」

⚠ IMPORTANT:

1. Disconnect power from the unit when performing a maintenance task.
2. The camera should be installed at least 10 centimeters away from the eave of a building.
3. CAUTION
RISK OF EXPLOSION IF BATTERY IS REPLACED BY AN INCORRECT TYPE.
DISPOSE OF USED BATTERIES ACCORDING TO THE INSTRUCTIONS

NOTE:

Camera Hardware Preventative Maintenance:

1. Visual inspection of all major components including accessories, cabling and connections where accessible for signs of deterioration or damage.
2. Check and clean cameras, lenses and housings inside and out as needed.
   - Please do not scratch, damage, or leave fingerprints on the dome/front cover and/or lens because this may decrease image quality.
   - For general cleaning of dirty areas, it is suggested to use compressed air to remove dust and/or other debris in order not to damage the on-board components.
   - In order to clean oil stains, it is recommended to use a spray-type decomposing cleaner (absolutely avoid reciprocating wipes on the surface). After the oil has decomposed, spray it with water, dry with air, and/or absorb water with a cotton cloth or a soft cloth (dab, please avoid wiping).
   - Do not use harsh detergents, gasoline, benzene or acetone, etc. to clean as they may deform or cause damage to the product. Also, excessive cleaning could damage the surface.
3. Check images for correct field of view (pan, tilt and zoom focus) and adjust as necessary.
4. Check and replace the Micro SD memory card as needed.
   - Stop edge recording before removing the Micro SD memory card.
   - Make sure that the Micro SD memory card is right side up and do not insert it with force, otherwise it may be damaged.
   - When it is raining or the humidity is high, insertion or ejection of the Micro SD memory card is not recommended.
5. Disassembly of the dome/front cover carries the risk of internal dew condensation, so please remember to replace the desiccant bags on the inside of the cameras before reassembly.
6. Check that the camera view has not been blocked by obstacles and that you can see the property perimeter clearly.
7. Make sure the interiors of cameras and accessories, like mounting kits and/or enclosures, are clean and dry.
8. Make sure cameras are securely attached to the wall/ceiling/mounting kits.

IMPORTANT:

1. Please contact VIVOTEK's certified dealers for power adapters.
2. Installation and maintenance service should only be performed by qualified technicians.
3. If powered by a power adapter, the adapter should be properly grounded.
4. The power cord must be connected to a socket or outlet with a ground connection.

⚠ **IMPORTANT:**

1. The camera is only to be connected to PoE networks without routing to outside plants.
2. For PoE connection, use only UL listed I.T.E. with PoE output.

1. La caméra ne doit être raccordée qu'à des réseaux PoE, sans routage vers des installations extérieures.
2. Pour les raccordements PoE, utilisez uniquement un équipement de TI homologué UL, avec une sortie PoE.

Use the camera only with a DC power supply that is UL listed, and limited power source (LPS) certified. The power supply should bear the UL listed and LPS marks. The power supply should also meet any safety and compliance requirements for the country of use.

n'utilisez la caméra qu'avec un bloc d'alimentation CC homologué UL, ainsi qu'avec une alimentation limitée (LPS) certifiée. Le bloc d'alimentation doit porter les indications d'homologation UL et LPS. Il doit également répondre aux exigences en matière de sécurité et de conformité relatives au pays d'utilisation.

Hardware Reset

The reset button is used to reset the system or restore the factory default settings. Sometimes resetting the system can return the camera to normal operation. If the system problems remain after reset, press the reset button longer to restore the factory settings and install again.

Reset: Press and release the recessed reset button with a straightened paper clip. Wait for the Network Camera to reboot.

Restore: Press and hold the recessed reset button for at least several seconds to restore. Note that all settings will be restored to factory defaults.

Micro SD/SDHC/SDXC Card Capacity

This network camera is compliant with **Micro SD/SDHC/SDXC 32GB, 64GB,** and other preceding standard SD cards preferrably with class 6 speed.

Test Record No. 1

- The manufacturer submitted a representative production sample of Network Camera, Model FE9382-EHV-v2.

- No test was considered necessary based upon previous evaluation under CB Scheme. The CB Scheme Test Certificate Ref. No. DK-102755-UL, dated 2020-09-11 and Report Ref. No. CB1292006013B dated 2020-09-08 were prepared by UL(Demko).

- Test results reported relate only to the items tested.

The following tests were conducted:

Test	Testing Location/Comments
--	--

Test results are valid only for the tested equipment. These tests are considered representative of the products covered by this Test Report. The test methods and results of the above tests have been reviewed and found to be in accordance with the requirements in the Standard(s) referenced at the beginning of this Test Report.

The following tests were waived:

Test	Rationale for Waiving
Steady- state voltage and current limits (5.2.2.2)	See CB Report
Temperature tests (5.4.1.4, 6.3.2, 9, B.2.6)	See CB Report
Equipment mounted to a wall or ceiling (8.7)	See CB Report
Input Test (B.2.5)	See CB Report
Simulated single fault conditions (B.4)	See CB Report
Test For The Permanence Of Markings (F.3.10)	See CB Report
Protection circuits for batteries provided within the equipment (M.3.2)	See CB Report
Limited power sources (Q.1)	See CB Report
Steady force test (T.2 – T.5)	See CB Report
Enclosure impact test (T.6)	See CB Report
Stress relief test (T.8)	See CB Report

The following supplements are provided as a part of this Test Record. NOTE: These supplements are only available to the Applicant via the CDA system.

Type	Supplement Id	Description
Attachment	01	CRD

Test Record Summary:

The results of this investigation, including construction review and testing, indicate that the products evaluated comply with the applicable requirements in the U.S. and Canadian (Bi-National) Standard for Safety of Audio/video, information and communication technology equipment - Part 1: Safety requirements CAN/CSA-C22.2 No.62368-1 2nd Edition, issued Date December, 2014, UL 62368-1 Audio/video, information and communication technology equipment - Part 1: Safety requirements, 2nd edition date December 1st, 2014. Any Information and documentation involving UL Mark services are provided on behalf of UL LLC (UL) or any authorized licensee of UL.

Test Report by:	Reviewed by:
Steven Huang	Jong Lee
Senior Project Engineer	Senior Project Engineer
Conformity Assessment Services	Conformity Assessment Services

Any information and documentation provided to you involving UL Mark services are provided on behalf of Underwriters Laboratories Inc

CONCLUSION

Samples of the product covered by this Report have been found to comply with the requirements covering the class and the products are judged to be eligible for Listing and Follow-Up Service. The manufacturer is authorized to use the Laboratories' Mark on such products which comply with the Follow-Up Service Procedure and any other applicable requirements of Underwriters Laboratories Inc. Only those products which properly bear the Laboratories' Mark are considered as Listed by Underwriters Laboratories Inc.

Report by:
Steven Huang
Senior Project Engineer
Conformity Assessment Services

Reviewed by:
Jong Lee
Senior Project Engineer
Conformity Assessment Services