Thank you for giving UL the opportunity to partner with you.
Please note, Follow-Up Procedure Revisions or Report Revisions do not include Authorization Pages, Indices, Section General, and/or Appendices unless revisions were required or requested.

Should you have any questions, after reviewing the material, or need to report any inaccuracies, please reach out to your UL representative or find UL contact details for your local Customer Service Department at https://www.ul.com/about/locations.

Please find attached the related material on Project 4789962160

For your convenience, the below describes the related updates:

Certificate of Compliance format now separates US and Canada certified Products by specified scheme and category.For revised/new documentation, please reference 2021-07-05 in the page headings.Volume(s) 1 Section(s) 40 were added.

E324690-20210705-CertificateofCompliance
E324690-20210705-Description
Figure-15-Total
Illustration-5-Total
E324690-20210705-TestRecord

This material is provided on behalf of UL LLC (UL) or any authorized licensee of UL.

Times change, Trust Remains™

CERTIFICATE OF COMPLIANCE

Certificate Number	UL-US-2133281-0
Report Reference	E324690-20210705
Date	7-Jul-2021
Issued to:	VIVOTEK INC 6TH FL, 192 LIEN CHENG RD CHUNG HO DISTRICT NEW TAIPEI Taiwan 235
This is to certify that representative samples of	AZOT - Audio/Video, Information and Communication Technology Equipment See Addendum Page for Product Designation(s).
	Have been investigated by UL in accordance with the Standard(s) indicated on this Certificate.
Standard(s) for Safety:	UL 62368-1, 2nd Ed., Issue Date: 2014-12-01
Additional Information:	See the UL Online Certifications Directory at https://iq.ulprospector.com for additional information

This Certificate of Compliance does not provide authorization to apply the UL Mark. Only the UL Follow-Up Services Procedure provides authorization to apply the UL Mark.

Only those products bearing the UL Mark should be considered as being UL Certified and covered under UL's Follow-Up Services.

Look for the UL Certification Mark on the product.

Bruce Mahrenholz, Director North American Certification Program

UL LLC

Any information and documentation involving UL Mark services are provided on behalf of UL LLC (UL) or any authorized licensee of UL. For questions, please contact a local UL Customer Service Representative at http://ul.com/aboutul/locations/

CERTIFICATE OF COMPLIANCE

Certificate Number UL-US-2133281-0
Report Reference E324690-20210705
Date 7-Jul-2021

This is to certify that representative samples of the product as specified on this certificate were tested according to the current UL requirements

Model	Category Description
FE9192-H	Network Camera

Bruce Mahrenholz, Director North American Certification Program

UL LLC

Any information and documentation involving UL Mark services are provided on behalf of UL LLC (UL) or any authorized licensee of UL. For questions, please contact a local UL Customer Service Representative at http://ul.com/aboutul/locations/

CERTIFICATE OF COMPLIANCE

Certificate Number	UL-CA-2127743-0
Report Reference	E324690-20210705
Date	7-Jul-2021
Issued to:	VIVOTEK INC 6TH FL, 192 LIEN CHENG RD CHUNG HO DISTRICT NEW TAIPEI Taiwan 235
This is to certify that representative samples of	AZOT7 - Audio/Video, Information and Communication Technology Equipment Certified for Canada See Addendum Page for Product Designation(s).
	Have been investigated by UL in accordance with the Standard(s) indicated on this Certificate.
Standard(s) for Safety:	CSA C22.2 NO. 62368-1-14, 2nd Ed., Issue Date: 2014-12-01
Additional Information:	See the UL Online Certifications Directory at https://iq.ulprospector.com for additional information

This Certificate of Compliance does not provide authorization to apply the UL Mark. Only the UL Follow-Up Services Procedure provides authorization to apply the UL Mark.

Only those products bearing the UL Mark should be considered as being UL Certified and covered under UL's Follow-Up Services.

Look for the UL Certification Mark on the product.

UL-CA-2127743-0
E324690-20210705

Bruce Mahrenholz, Director North American Certification Program

UL LLC

Any information and documentation involving UL Mark services are provided on behalf of UL LLC (UL) or any authorized licensee of UL. For questions, please contact a local UL Customer Service Representative at http://ul.com/aboutul/locations/

CERTIFICATE OF COMPLIANCE

Certificate Number UL-CA-2127743-0
Report Reference E324690-20210705
Date 7-Jul-2021

This is to certify that representative samples of the product as specified on this certificate were tested according to the current UL requirements

Model	Category Description
FE9192-H	Network Camera

Bruce Mahrenholz, Director North American Certification Program

UL LLC

Any information and documentation involving UL Mark services are provided on behalf of UL LLC (UL) or any authorized licensee of UL. For questions, please contact a local UL Customer Service Representative at http://ul.com/aboutul/locations/

File E324690
Project 4789962160

July 5, 2021

REPORT

on

Audio/Video, Information and Communication Technology Equipment

VIVOTEK INC
NEW TAIPEI, 235 TAIWAN

Copyright © 2021 UL LLC

UL LLC authorizes the above named company to reproduce this Report only for purposes as described in the Conclusion, provided it is reproduced in its entirety.

UL TEST REPORT AND PROCEDURE	
Standard:	[X] UL 62368-1, 2nd Edition, 2014-12-01 (Audio/video, Information and Communication Technology Equipment - Part 1: Safety Requirements) [X] CAN/CSA C22.2 No. 62368-1-14, 2nd Edition, 2014-12 (Audio/video, Information and Communication Technology Equipment - Part 1: Safety Requirements)
Certification Type:	[X] Listing [ ] Recognized Component [ ] Unlisted Component [ ] Listed Accessory
CCN:	[X] AZOT, [X] AZOT7 (Information Technology Equipment)
Product: **Model:** **Rating:**	Network Camera FE9192-H PoE DC 37-57 V, 0.24-0.15 A (Optionally provided on marking plate)
Applicant Name and Address:	VIVOTEK INC 6TH FL, 192 LIEN CHENG RD CHUNG HO DISTRICT NEW TAIPEI 235 TAIWAN

This is to certify that representative samples of the products covered by this Test Report have been investigated in accordance with the above referenced Standards. The products have been found to comply with the requirements covering the category and the products are judged to be eligible for Follow-Up Service under the indicated Test Procedure. The manufacturer is authorized to use the UL Mark on such products which comply with this Test Report and any other applicable requirements of UL LLC ('UL') in accordance with the Follow-Up Service Agreement. Only those products which properly bear the UL Mark are considered as being covered by UL's Follow-Up Service under the indicated Test Procedure.

The applicant is authorized to reproduce the referenced Test Report provided it is reproduced in its entirety.

[ ] UL authorizes the applicant to reproduce the latest pages of the referenced Test Report consisting of this page through to the end of the Engineering Conditions of Acceptability.

Any information and documentation involving UL Mark services are provided on behalf of UL LLC (UL) or any authorized licensee of UL

Prepared by: Stanley Tsai Reviewed by: Max Ma

Supporting Documentation

The following documents located at the beginning of this Procedure supplement the requirements of this Test Report:

A. Authorization - The Authorization page may include additional Factory Identification Code markings.

B. Generic Inspection Instructions -

i. Part AC details important information which may be applicable to products covered by this Procedure. Products described in this Test Report must comply with any applicable items listed unless otherwise stated in the body of this Test Report

ii. Part AE details any requirements which may be applicable to all products covered by this Procedure. Products described in this Test Report must comply with any applicable items listed unless otherwise stated in the body of each Test Report

C. Listing Mark/Recognized Component Mark Data Page - details the requirements for the UL Certification Mark which is not controlled by the technical standard used to investigate these products. Products are permitted to bear only the Certification Mark(s) corresponding to the countries for which it is certified, as indicated in each Test Report.

Product Description

The equipment is a Network Camera which is intended to use within audio/video, information and communication technology equipment.

The equipment consists of electronic components are mounted on PCB and housed by plastic/metal enclosures and fixed by screws. Unit must be mounted on a ceiling.

The equipment is mounted on ceiling and power supplied from the external power adaptor or Power-over-Ethernet (PoE) device (only can receive one power source at time) which is complied with the requirement of Limited Power Source (LPS) or Power source class 2 (PS2).

PoE function of the equipment is considered not likely to require connection to an Ethernet network with outside plant routing, including campus environment; and the installation instruction clearly states that the ITE is to be connected only to PoE networks without routing to the outside plant.

Model Differences

N/A

Test Item Particulars (NOT FOR FIELD REPRESENTATIVE'S USE)

Classification of installation and use by.....	☒ Ordinary person ☐ Instructed person ☐ Skilled person ☒ Children likely to be present
Supply Connection.....	☐ pluggable equipment ☐ type A ☐ type B ☐ permanent connection ☐ detachable power supply cord ☐ non-detachable power supply cord ☒ not directly connected to the mains
Equipment mobility	☐ movable ☐ hand-held ☐ transportable ☒ stationary ☐ for building-in ☐ direct plug-in ☐ rack-mounting ☐ wall-mounted
Over voltage category (OVC)	☐ OVC I ☐ OVC II ☐ OVC III ☐ OVC IV ☒ other: not direct connect to mains
Fundamental Frequency.....	☐ 50/60 Hz (for AC source) ☐ 50 Hz ☐ 60 Hz ☐ other____ Hz
Class of equipment	☐ Class I ☐ Class II ☒ Class III ☐ Not classified
Access location	☐ restricted access location ☒ N/A
Pollution degree (PD)	☐ PD 1 ☒ PD 2 ☐ PD 3
IP protection class	☒ IP X0 ☐ IP ____
Tested for IT power systems	☐ Yes ☒ No
IT testing, phase-phase voltage (V)	☐ ____ ☒ N/A

Altitude during operation (m) .....:	☒ Up to 2,000 ☐ Up to ___ m
Altitude of test laboratory (m) .....:	☒ Less than 2,000 ☐ Approximately _____
Mass of equipment (kg) .....:	0.354 kg

Technical Consideration (NOT FOR FIELD REPRESENTATIVE'S USE)

- The product was submitted and evaluated for use at the maximum ambient temperature (Tma) permitted by the manufacturer's specification of: 50 °C
- The product is intended for use on the following power systems: No direct connection
- Considered current rating of protective device as part of the building installation (A) :Mains supply tolerance (%) or absolute mains supply values : No direct connection
- The following circuit locations (with circuit/schematic designation) were investigated as a limited power source (LPS): All circuit output ports
- The following are available from the Applicant upon request: Installation (Safety) Instructions / Manual.
- Based upon the product specification provided by the manufacturer, this unit is intended to be supplied by an UL Listed power source suitable for use at Tma 50 degree C whose output meets ES1, LPS and is rated PoE 37-57 Vdc, 0.24-0.15 A
- The product is only to be connected to PoE network without routing to outside plant.
- LEDs provided in the product are considered low power devices: Yes
- No any ordinary person accessible area is located inside the equipment.
- Installation and maintenance service shall only be performed by qualified personnel.
- The product is only to be connected to PoE network without routing to outside plant.
- The product was investigated for indoor use and ceiling mounted only.

Additional Information

N/A

Additional Standard

N/A

Markings, instructions and instructional safeguards		
Clause Title	**Marking or Instruction Details**	
	English	French
Equipment identification marking – Manufacturer identification	Listee's or Recognized company's name, Trade Name, Trademark or File Number	
Equipment identification marking – model identification	Model Number	
Equipment rating marking – ratings (optional)	Input Ratings (voltage, frequency/dc, current/power)	
Inter-connecting cables - External detachable	Listee's Name and Part number (Marking or Instruction)	
Protective earthing is used as a safeguard	Ensure to connect the power supply to a socket-outlet with earthing connection, or equivalent.	
Replaceable batteries	"CAUTION: Risk of Explosion if Battery is replaced by an Incorrect Type. Dispose of Used Batteries According to the Instructions."	“ATTENTION: Risque d’explosion si la batterie est remplacée par un type incorrect. Mettre au rebus les batteries usagées selon les instructions.“
User Manual	If the power adapter doesn't ship with the unit, the user manual shall have the description as below or equivalent: "This product is intended to be supplied by a Listed Power source, whose output meets LPS (Limited Power Source) or PS2, and output rating 37-57Vdc, 0.24-0.15A min, suitable for use at Tma 50 degree C. If need further assistance with purchasing the power source, please contact to Vivotek for further information. Or equivalent.	
PoE Installation Guide	"The Network Camera is to be connected only to PoE networks without routing to the outside plant." or similar wording.	
User Manual	User Instruction/Installation/Safety Manual shall be shipped with unit.	

Special Instructions to UL Representative

(1) If the Power Supply does not mark with "LPS" or "Limited Power Source", please check the UL report for Power Supply and confirm whether it complies with Limited Power Source or PS2 in Technical Consideration.

(2) For Power Adaptor without listing Mfr./Model (Interchangeable) in Critical Component table, the Field Representative should verify the Tma (maximum ambient temperature) is minimum 50 degree C, LPS or PS2 from the updated version of UL reports for Power source which was/were certified by UL60950-1, 2nd edition, date 2014-10-14 or UL 62368-1, 2nd Edition, 2014-12-01 or newest (provide from customer).

Production-Line Testing Requirements

Electric Strength Test Special Constructions - Refer to Generic Inspection Instructions, Part AC for further information.

Model	Component	Removable Parts	Test probe location	V rms	V dc	Test Time, s
--	--	--	--	--	--	--

Earthing Continuity Test Exemptions - This test is not required for the following models:

All models

Electric Strength Test Exemptions - This test is not required for the following models:

All models

Electric Strength Test Component Exemptions - The following solid-state components may be disconnected from the remainder of the circuitry during the performance of this test:

--

Sample and Test Specifics for Follow-Up Tests at UL

Model	Component	Material	Test	Sample(s)	Test Specifics
--	--	--	--	--	--

4.1.2	**TABLE: list of critical components**					Pass
Object/part or Description	Manufacturer/ trademark	type/model	technical data	Product Category CCN(s)	Required Marks of Conformity	Supplement ID
01. Label	Interchangeable	Interchangeable	Min. 70 degree C to metal surface	PGDQ2 or PGJI2	UL	--
02. POE/Power adaptor (Optional)	Interchangeable	Interchangeable	O/P: 37-57 Vdc, 0.24-0.15 A, 50 degree C Marked with "LPS" or "Limited Power Source" or complied with "Limited Power Source" checked by inspection.	QQGQ ,or QQJQ	UL	--
02-1. Power Supply Cord (Optional)	Interchangeable	Interchangeable	Detachable, maximum 4.5 m long, minimum 1.5 m long. Type S, SE, SJ, SJE, SJO, SJOO, SJT, SJTO, SJTOO, SO, SOO, ST, STO, STOO, PPE or W, no. 18 AWG minimum. One end terminates in NEMA 5-15P or NEMA 6-15P, the other end with an appliance coupler.	ELBZ	UL	--
02-1a. Power Supply Cord (Optional) (Alternate)	Interchangeable	Interchangeable	Detachable, maximum 2.4 m long, minimum 1.5 m long. Type SV, SVE, SVO, SVOO, SVT, SVTO, SVTOO, SP-2, SPE-2, SPT-2, NISP-2, NISPE-2, NISPT-2, SP-3, SPE-3 or SPT-3, no. 18 AWG minimum. One end terminates in NEMA 5-15P or NEMA 6-15P, the other end with an appliance coupler.	ELBZ	UL	--

03. Lens cover	TEIJIN LIMITED RESIN AND PLASTIC	L-1225Z(#1)(f1)	HB min., 2.5 mm thickness min. 115°C. Overall See Illustration-2 for details.	QMFZ2	UL	--
04. Plastic enclosure	SABIC JAPAN L L C	945(GG)	V-0, 2.5 mm thickness min. 120°C. Overall See Illustration-3 for details.	QMFZ2	UL	--
04a. Plastic enclosure (Alternate)	TEIJIN LIMITED RESIN AND PLASTIC	LN-3520Z(#)(f1)	V-0, 2.5 mm thickness min. 125°C. Overall See Illustration-3 for details.	QMFZ2	UL	--
05. Metal enclosure	Interchangeable	Interchangeable	AL(ADC12), Overall See Illustration-4 for details.	--	--	--
06. Lithium rechargeable coin battery (BT2)	Seiko Instruments Inc Micro-Energy Div	MS621T	Max. Charging voltage 3.4Vdc, Max. Charging current 300mA. Reversed charging current was protected by D5 and R163 (470ohm)	BBCV2	UL	--
07. POE Transformer (T1)	Matrix Electronics Co., Ltd.	MTSE018	125°C	--	--	--
08. PWB	Interchangeable	Interchangeable	Min. V-1, 105°C	ZPMV2	UL	--
09. Thermal pad	Interchangeable	Interchangeable	4g max., overall approx.. 15.0 by 15.0 by 2.0 mm for U1 & 19.0 by 19.0 by 0.7 mm for internal metal part top side.	QMFZ2	UL	--
09a. Thermal pad (Alternate)	Interchangeable	Interchangeable	4g max., overall approx.. 15.0 by 15.0 by 2.0 mm for U1 & 19.0 by 19.0 by 0.7 mm for internal metal part top side.	--	--	--
10. Wiring, internal circuits (Optional)	Interchangeable	Interchangeable	FEP, PTFE, PVC, TFE, neoprene, polyimide or marked VW-1; min 57 V, 105 degree C.	AVLV2	UL	--

11. Interconnecting Cable (Optional)	Interchangeable	Interchangeable	Maximum length 3.05 m. FEP, PTFE, PVC, TFE, neoprene, polyimide or rated VW-1 or FT-1. Minimum 80 degree C. Minimum 30 V for non-POE circuit & 60V for POE circuit.	AVLV2	UL	--
11a. Interconnecting Cable (Optional)	Interchangeable	Interchangeable	Type CMP or CMR or CMG or CM or CMX or CMUC or CMH, 3.05 m long maximum.	DUXR or DUZX	UL	--
12. Connectors and Receptacles (ES1 circuit) (except for PoE port)	Interchangeable	Interchangeable	Minimum 30 V	ECBT2, DUXR2	UL	--
12a. Connectors and Receptacles (ES1 circuit) (except for PoE port) (Alternate)	Interchangeable	Interchangeable	Copper alloy pins housed in bodies of (QMFZ2), and V-2 minimum.	QMFZ2	UL	--
13. Connectors and Receptacles (ES1 circuit) (for PoE port)	Interchangeable	Interchangeable	Minimum57 V	ECBT2, DUXR2	UL	--
13a. Connectors and Receptacles (ES1 circuit) (for PoE port) (Alternate)	Interchangeable	Interchangeable	Copper alloy pins housed in bodies of (QMFZ2), and V-2 minimum.	QMFZ2	UL	--
14. Internal Plastic Part Materials (Optional)	Interchangeable	Interchangeable	HB or HBF minimum	QMFZ2	UL	--
15. Plastic Material of Flexible Printed Wiring (Optional)	Interchangeable	Interchangeable	HB min. or HBF min. when no components mounted on surface.	QMFZ2 or QMTS2	UL	--
15a. Plastic Material of Flexible Printed Wiring	Interchangeable	Interchangeable	HB min. or HBF min. when no components mounted on	ZPMV2 or ZPXK2	UL	--

(Alternate) (Optional)			surface.			
15b. Plastic Material of Flexible Printed Wiring (Alternate) (Optional)	Interchangeable	Interchangeable	V-1 min. or VTM-1 min. when components mounted on surface existed.	ZPMV2 or ZPXK2	UL	--

ENCLOSURES

Type	Supplement Id	Description
Photographs	Figure-01	Overall View-1
	Figure-02	Overall View-2
	Figure-03	Overall View-3
	Figure-04	Internal View-1
	Figure-05	Internal View-2
	Figure-06	Lens View-1
	Figure-07	Lens View-2
	Figure-08	Internal board View-1
	Figure-09	Internal board View-2
	Figure-10	Main board View-1
	Figure-11	Main board View-2
	Figure-12	POE board View-1
	Figure-13	POE board View-2
	Figure-14	Thermal pad-1 View
	Figure-15	Thermal pad-2 View
Illustrations	Illustration-1	Overall drawing
	Illustration-2	Lens Cover drawing
	Illustration-3	Plastic enclosure drawing
	Illustration-4	Metal enclosure drawing
	Illustration-5	User’s Manual

Figure-1 Page-1

Figure-2 Page-1

Figure-3 Page-1

Figure-4 Page-1

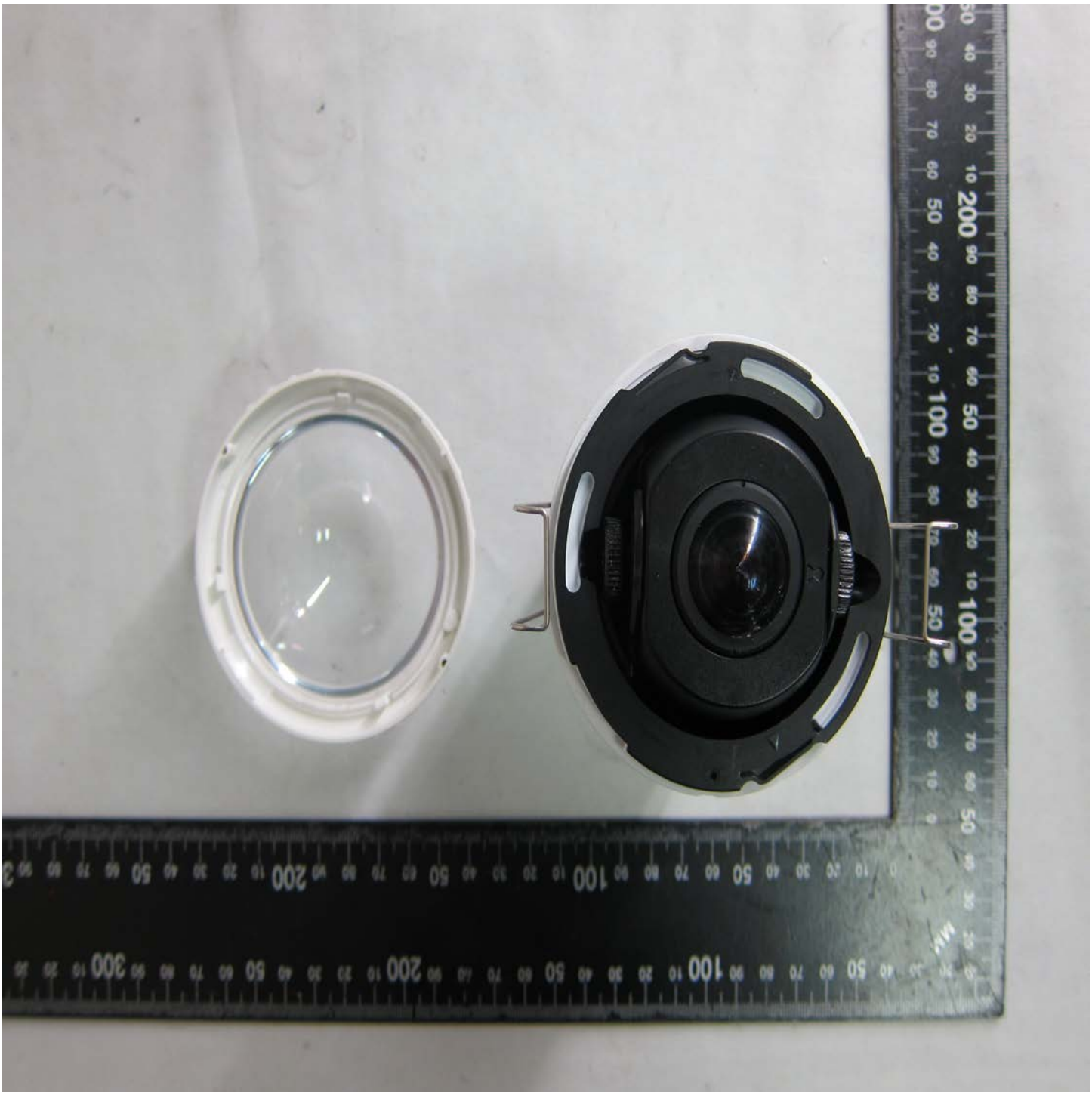

Figure-5 Page-1

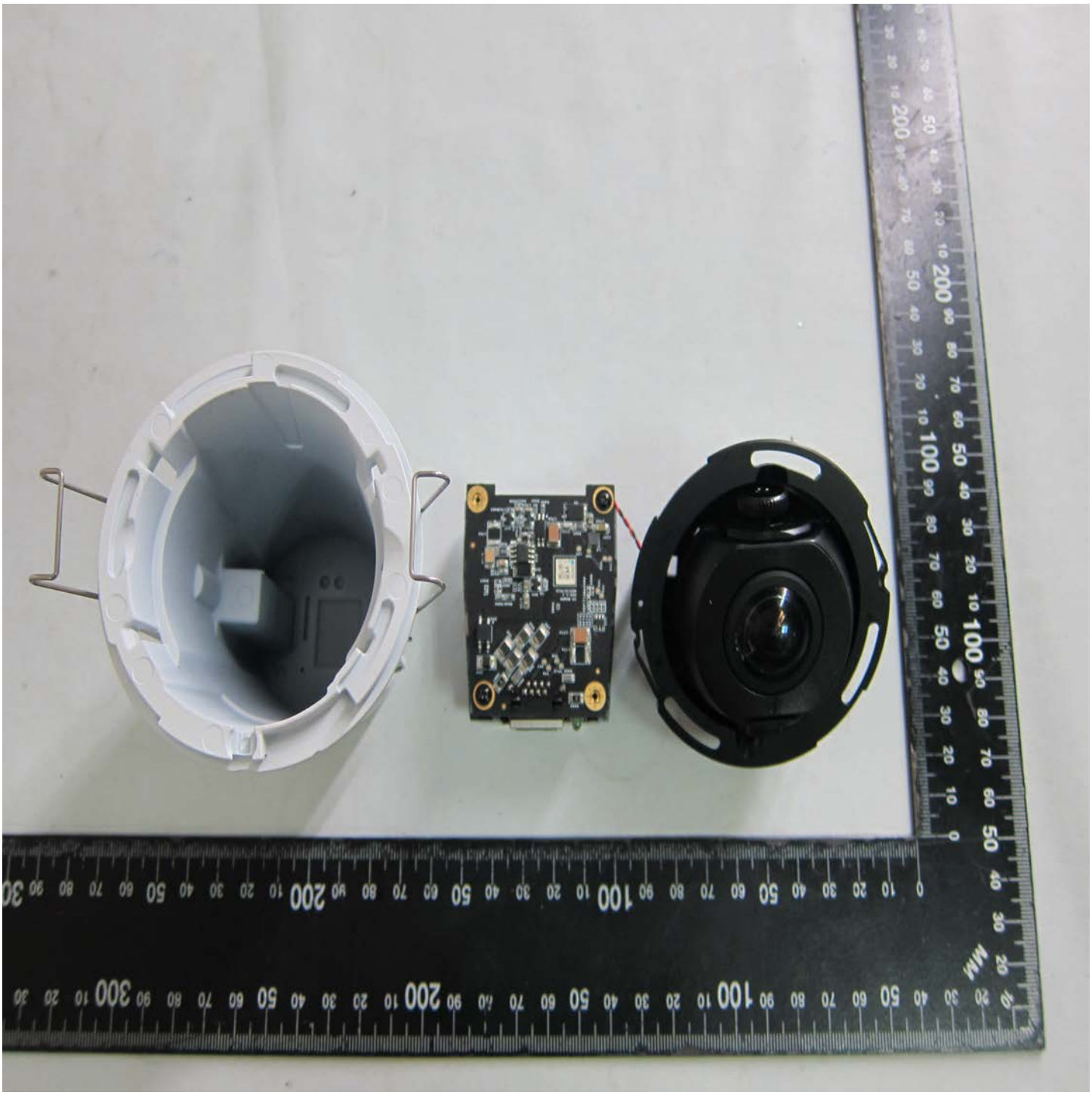

Figure-6 Page-1

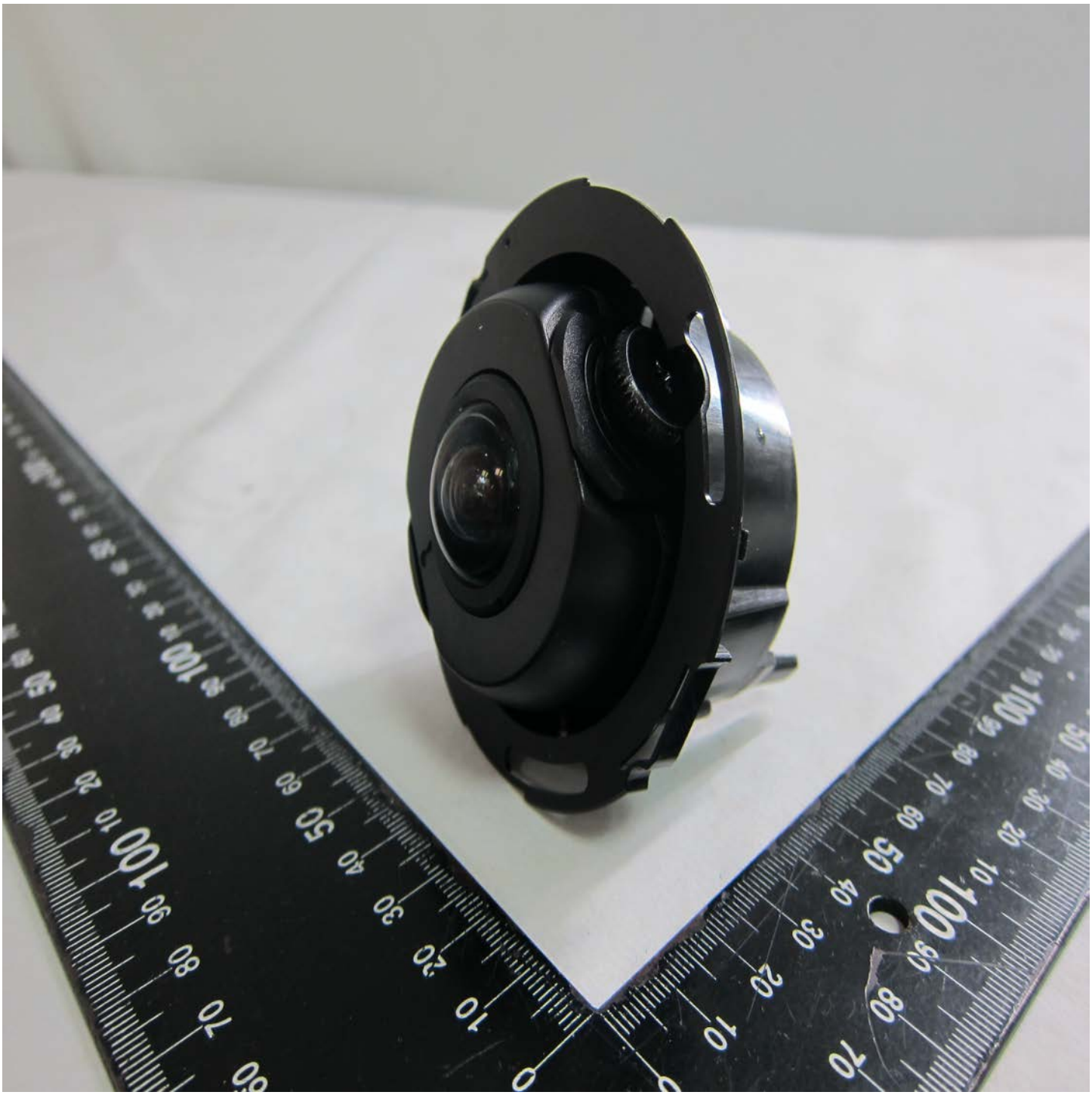

Figure-7 Page-1

Figure-8 Page-1

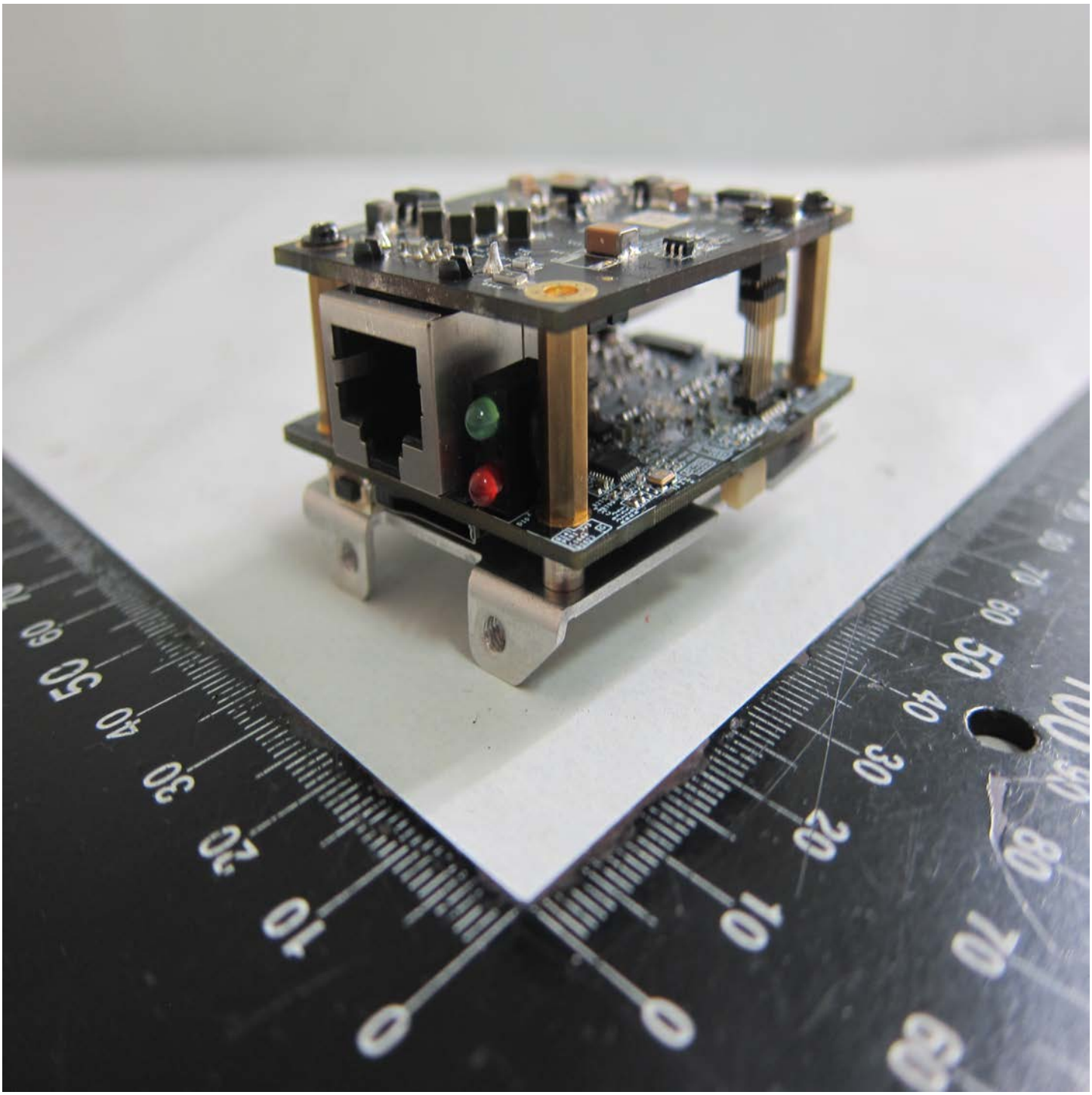

Figure-9 Page-1

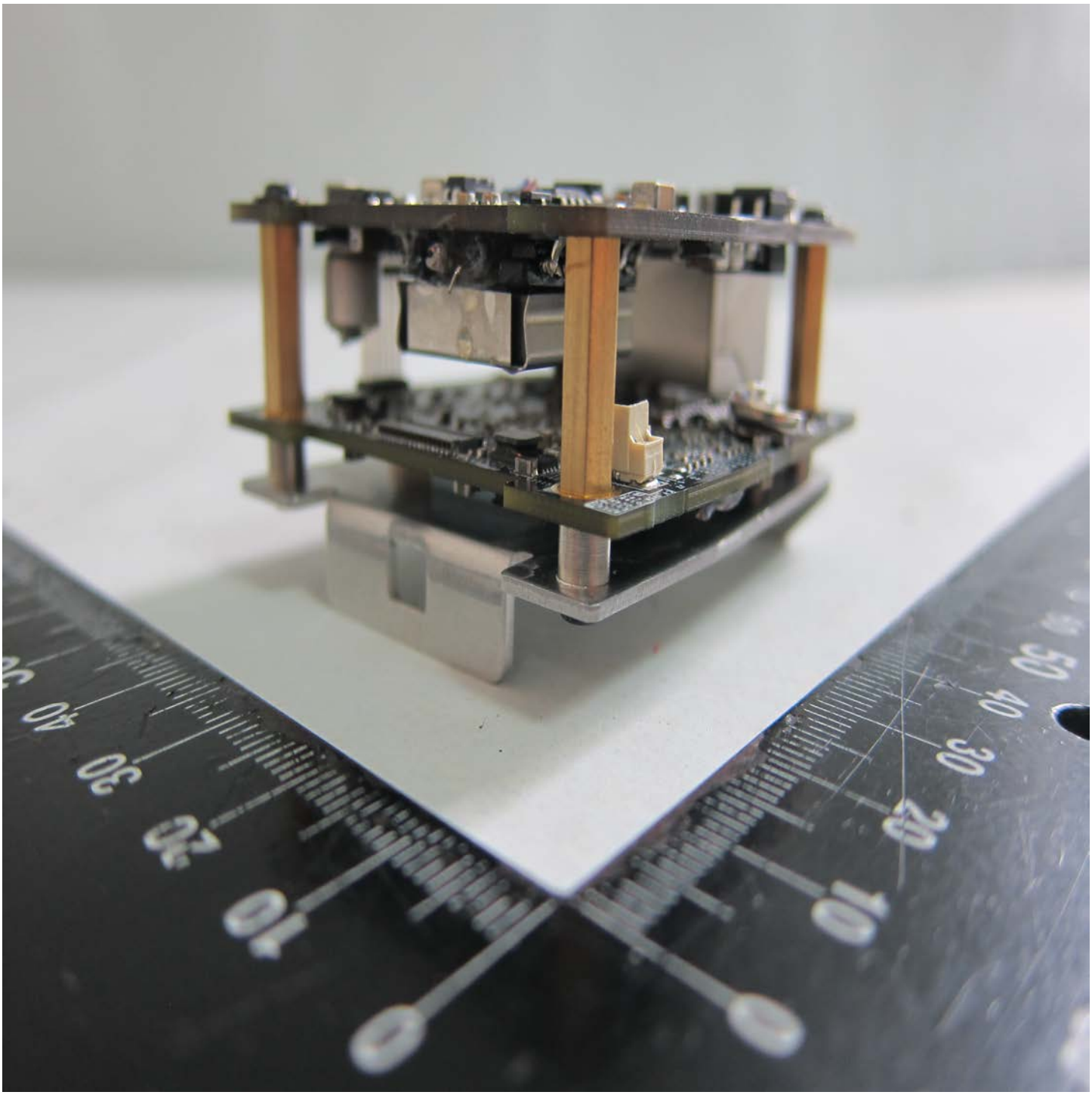

Figure-10 Page-1

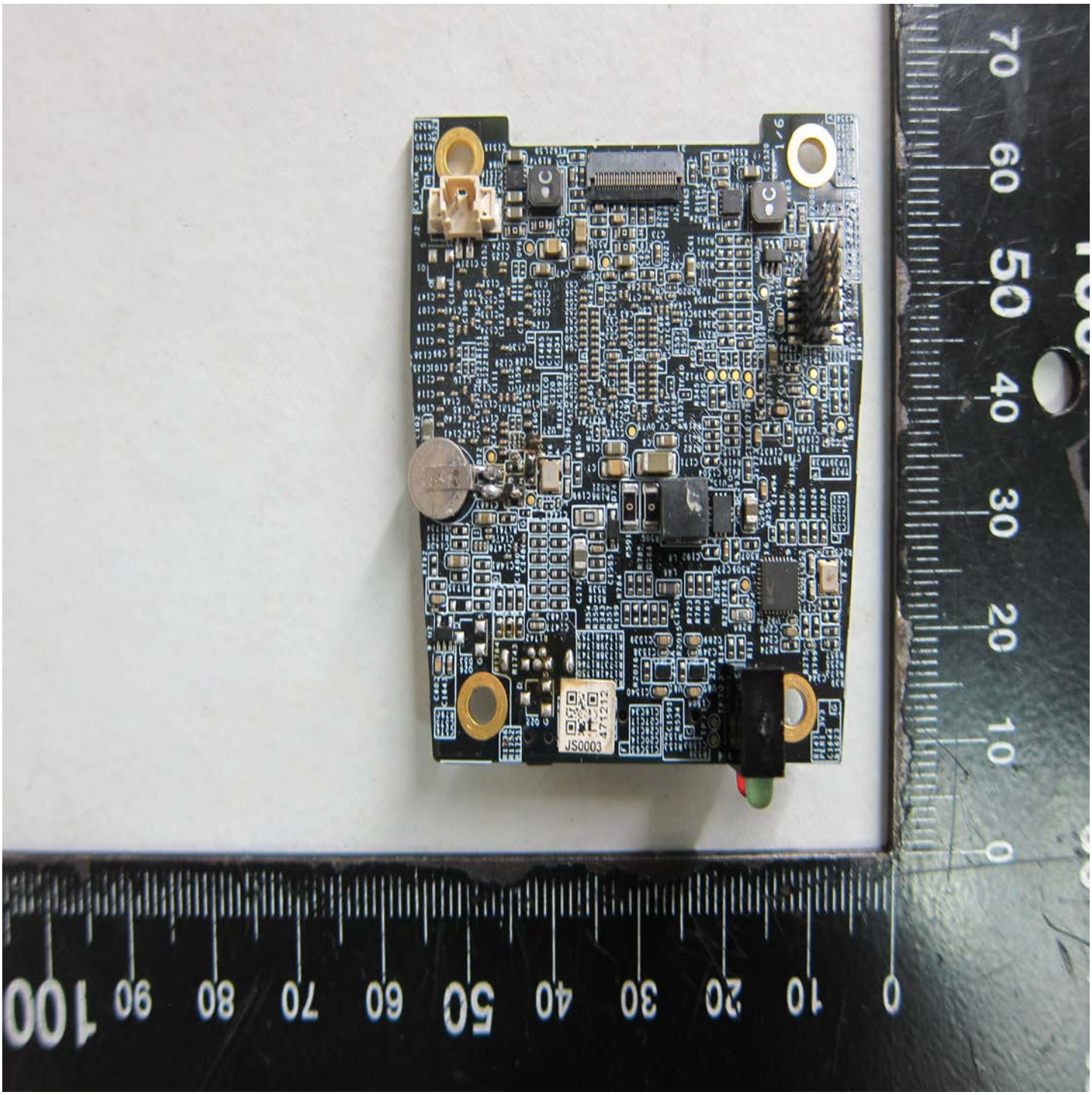

Figure-11 Page-1

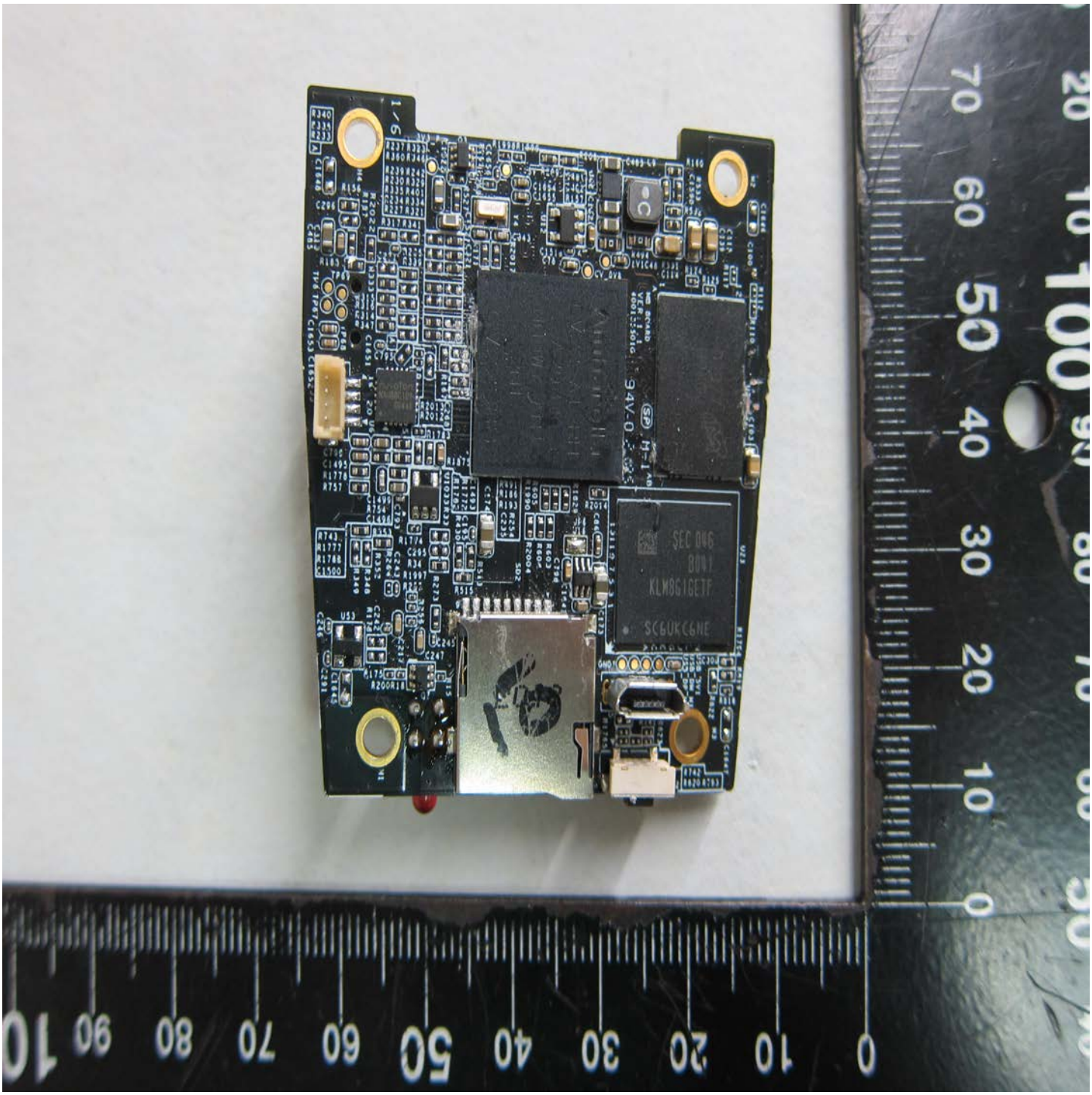

Figure-12 Page-1

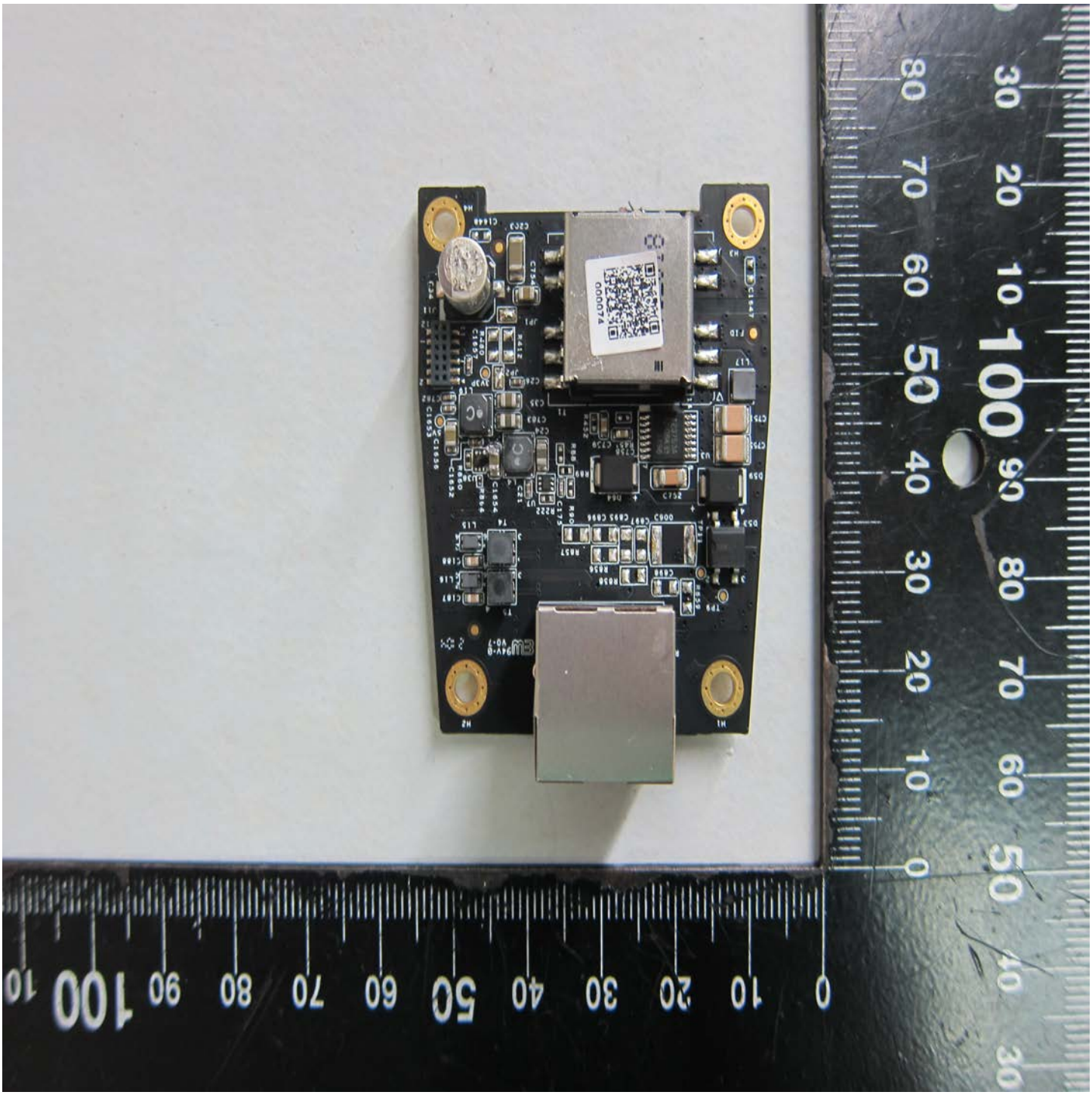

Figure-13 Page-1

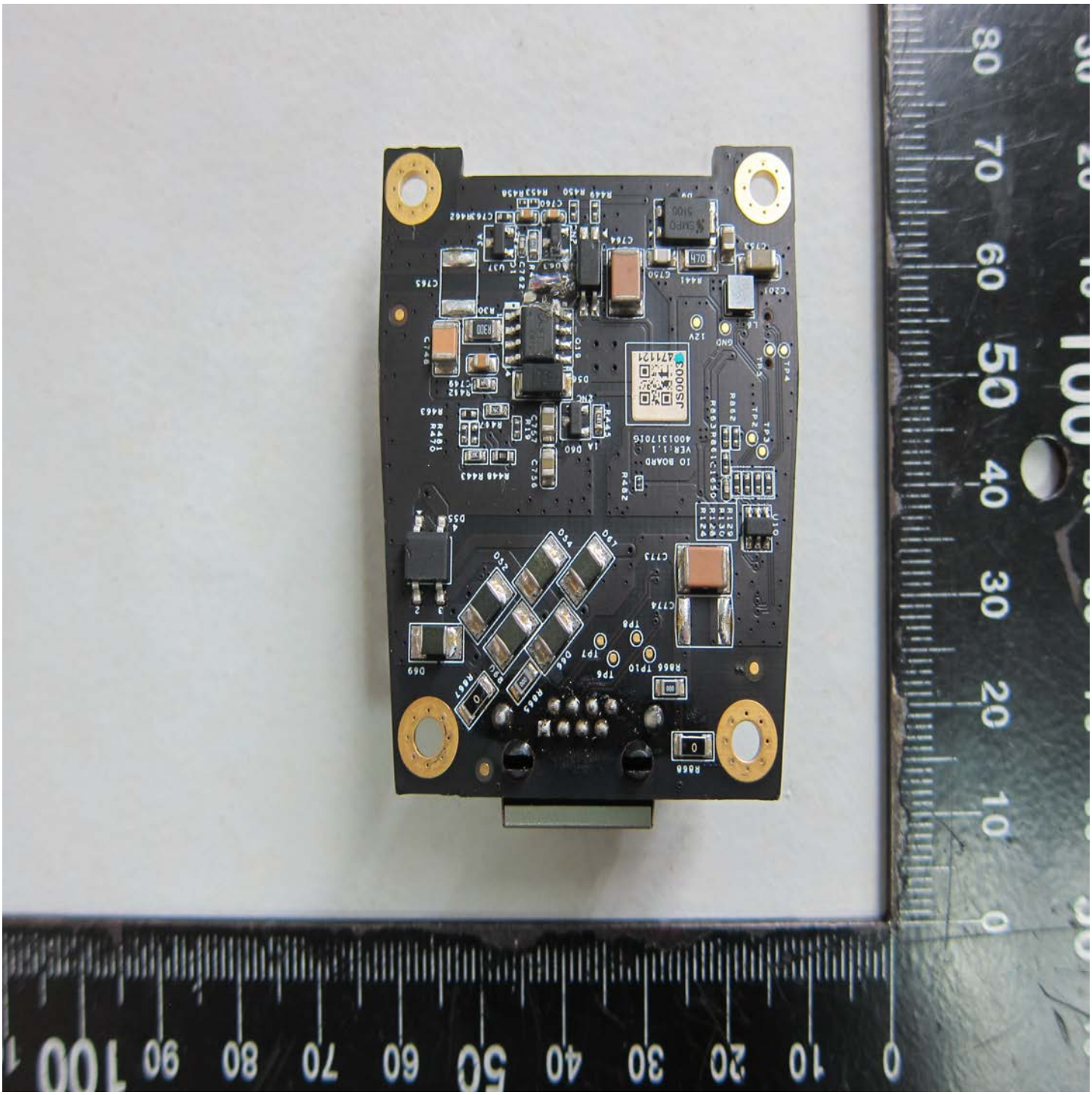

Figure-14 Page-1

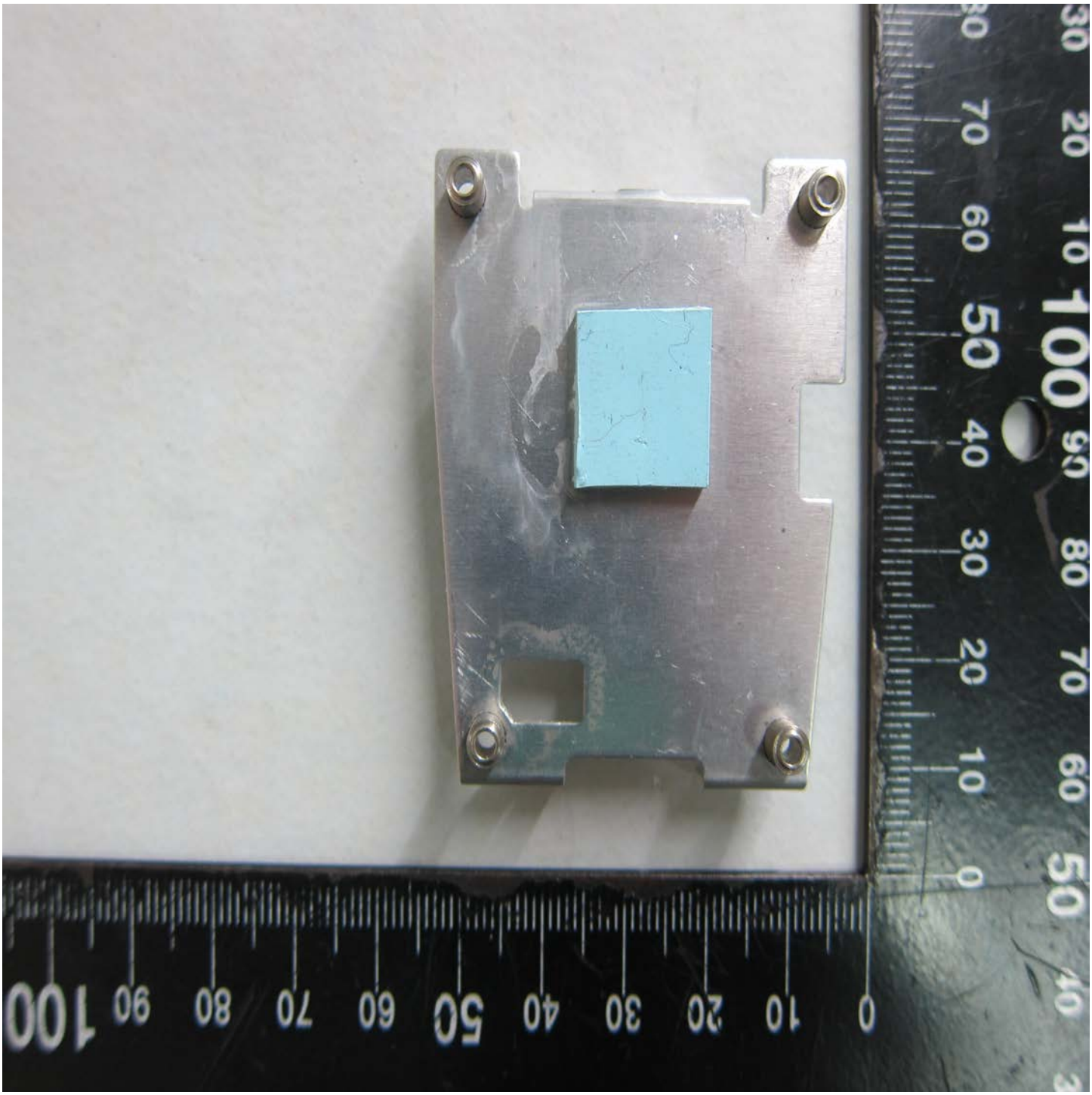

Figure-15 Page-1

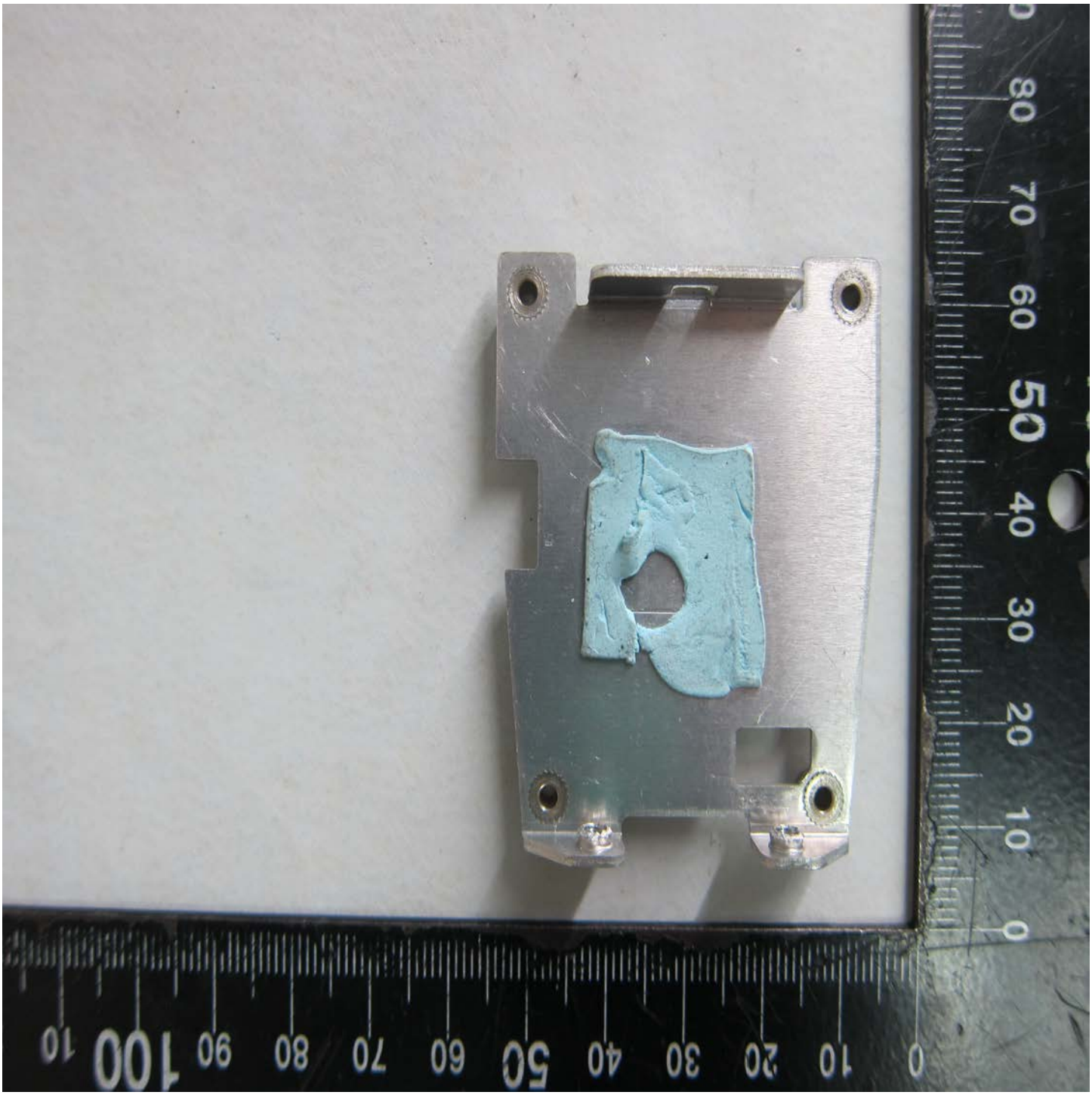

The following Page(s) are related to Illustration-1. The next supplement, if applicable, will be identified with a new Supplement Page Heading.

機 密|CONFIDENTIAL

REVISIONS				
REV	DESCRIPTION	POSITION	ENGINEER	DATE
1.0	New Edition			Sep-03-20

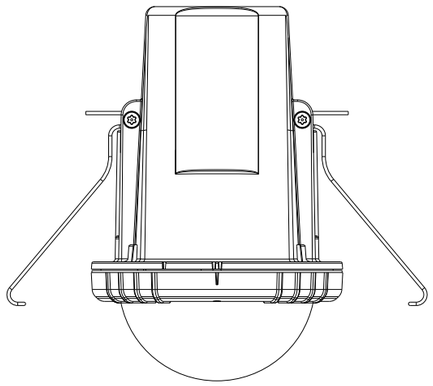

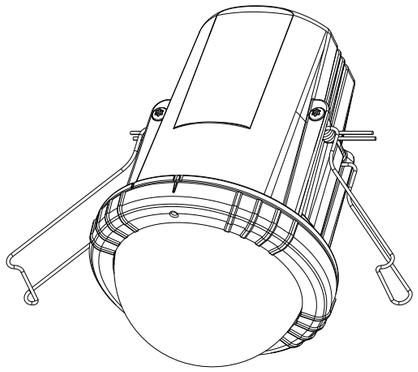

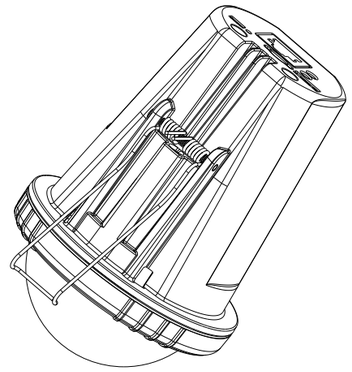

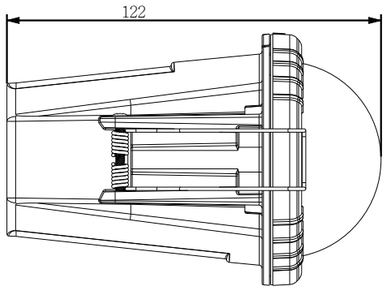

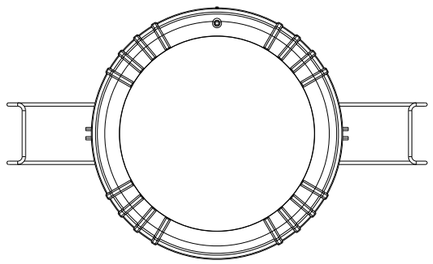

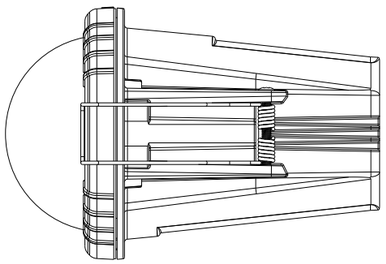

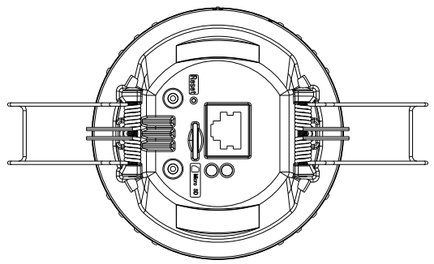

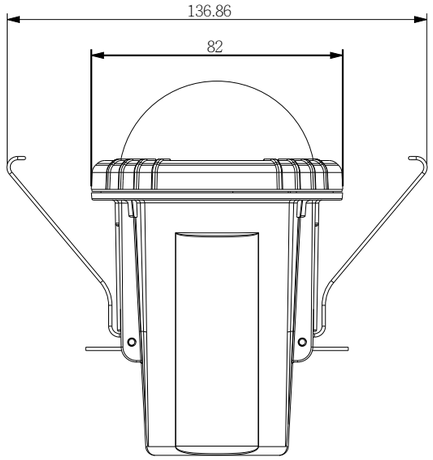

正式圖面

All dimension without tolerance should conform to the grade on table F						
公差等級	線性尺寸允許偏差 Range(mm)					
名稱	0.5~3	3~6	6~30	30~120	120~400	400~1000
F	±0.05	±0.05	±0.1	±0.15	±0.2	±0.3
M	±0.1	±0.1	±0.2	±0.3	±0.5	±0.8
C	±0.2	±0.3	±0.5	±0.8	±1.2	±2
USER						
公差等級	根據長度所允許角的短邊的角度偏差 Range(mm)					
名稱	≤10	10~50	50~120	120~400	>400	
F M	±1°	±0° 30'	±0° 20'	±0° 10'	±0° 5'	
C	±1° 30'	±1°	±0° 30'	±0° 15'	±0° 10'	
USER						

VIVOTEK

VIVOTEK Incorporated

THIS DRAWING ON THIS PRINT AND INFORMATION THEREWITH ARE PROPRIETARY TO VIVOTEK INC. AND SHALL NOT BE USED OR DISCUSSED IN WHOLE OR IN PART WITHOUT VIVOTEK'S CONSENT.

CP02-WI-014-01-6

PART NO.					
ENGR	Double	MODEL	FE9192-H / FD9182-H		
DRN		DRAWING TITLE	FE9192-H-6VIEW		
CHK					
M'TL		ISSUE DATE	Sep-03-20	REVISION	1.81
FINISH		SCALE	1:2	UNIT	mm
	第三角法	SIZE	A3	SHEET	1 OF 1

機 密|CONFIDENTIAL

REVISIONS

REV	DESCRIPTION	POSITION	ENGINEER	DATE
1.0	New Edition			Dec-30-20

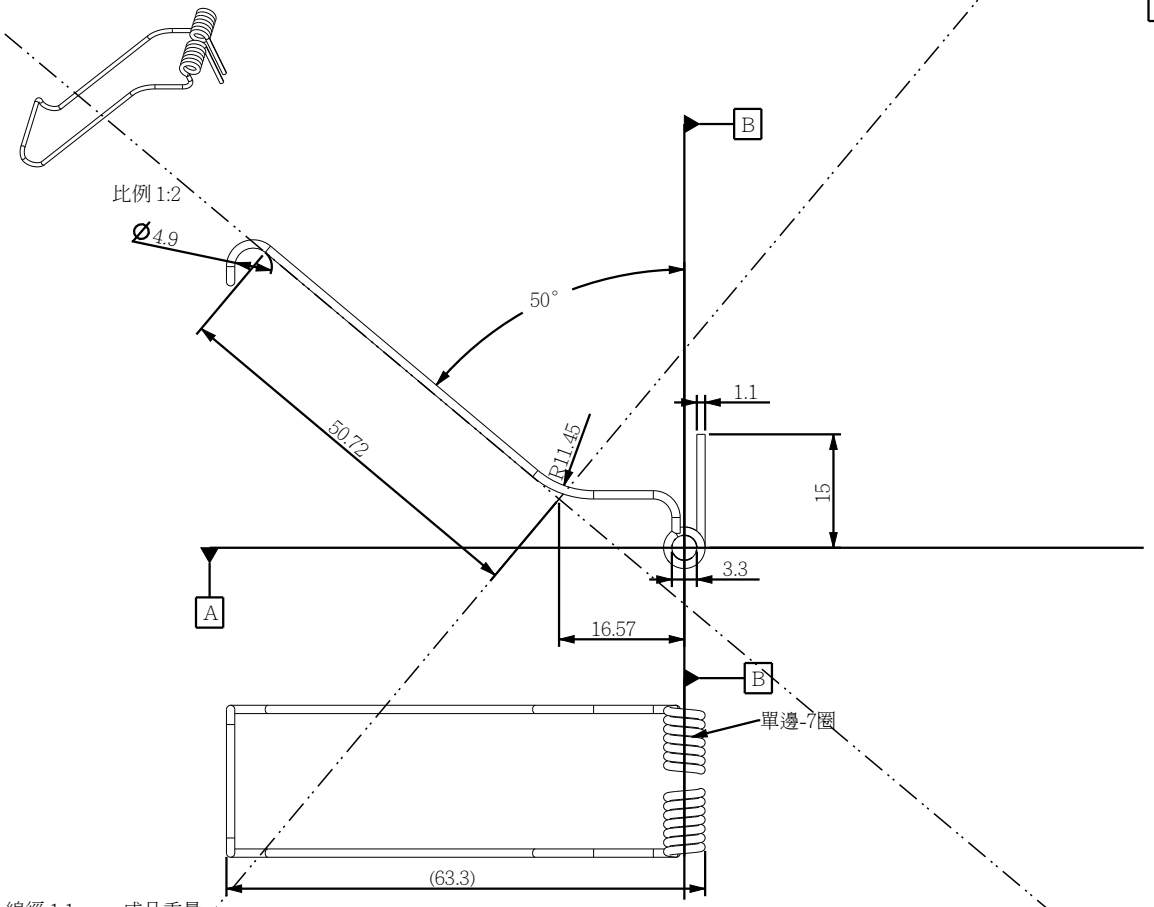

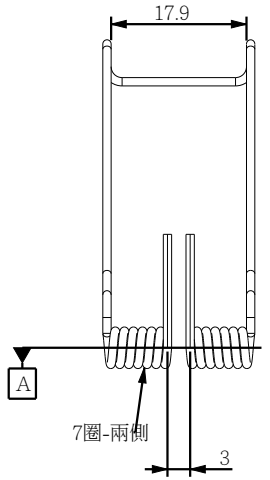

報價

注意事項:
1.材質:SUS304，線徑:1.1mm，成品重量:
2.部品必須後加工，包含部分攻牙與植釘製程，相關加工細則，請依據圖面標示施做
3.部品需要去除毛邊利角，不得割手，毛邊高度限制為0.1mm，注意毛邊方向
4.成品表面不可有:成型不良痕跡、破損、油汙、積漆與毛邊，外觀級別請參照圖面標示，
相關檢驗細則，請依據[金屬壓鑄類檢驗作業規範]為標準
5.橢圓符號框選尺寸為重點檢驗尺寸(成品尺寸，非素材數值)，請依據圖面標示量測
6.*符號為CPK量測尺寸
7.參考尺寸以配合組裝為主要考量，必要時需要額外實配檢驗
8.變形量請依圖面標示,或尺寸<0.25%定義
9.所有未標柱之尺寸都需要符合2D內的公差表

公差等級	線性尺寸允許偏差 Range(mm)					
名稱	0.5~3	3~6	6~30	30~120	120~400	400~1000
F			±0.1	±0.15	±0.2	±0.3
M	±0.1	±0.1	±0.2	±0.3	±0.5	±0.8
C		±0.3	±0.5	±0.8	±1.2	±2
USER						

公差等級	根據長度所允許角的短邊的角度偏差 Range(mm)					
名稱	≦10	10~50	50~120	120~400	>400	
F	±1°	±0° 30'	±0° 20'	±0° 10'	±0° 5'	
M						
C	±1° 30'	±1°	±0° 30'	±0° 15'	±0° 10'	
USER						

VIVOTEK Incorporated

THIS DRAWING ON THIS PRINT AND INFORMATION THEREWITH ARE PROPRIETARY TO VIVOTEK INC, AND SHALL NOT BE USED OR DISCUSSED IN WHOLE OR IN PART WITHOUT VIVOTEK'S CONSENT.

CP02-WI-014-01-6

PART NO.					
ENGR	Double	MODEL	FE9192-H		
DRN	Double	DRAWING TITLE	FE9192-H_SPRING		
CHK.					
M'TL	SUS304_Ø 1.1 mm	ISSUE DATE	Dec-30-20	REVISION	
FINISH		SCALE	1:1	UNIT	mm
	第三角法	SIZE	A4	SHEET	1 OF 1

The following Page(s) are related to Illustration-2. The next supplement, if applicable, will be identified with a new Supplement Page Heading.

機 密|CONFIDENTIAL

REVISIONS

REV	DESCRIPTION	ENGINEER	REQUIRE	DATE
1.0	New Edition			03-Aug-16

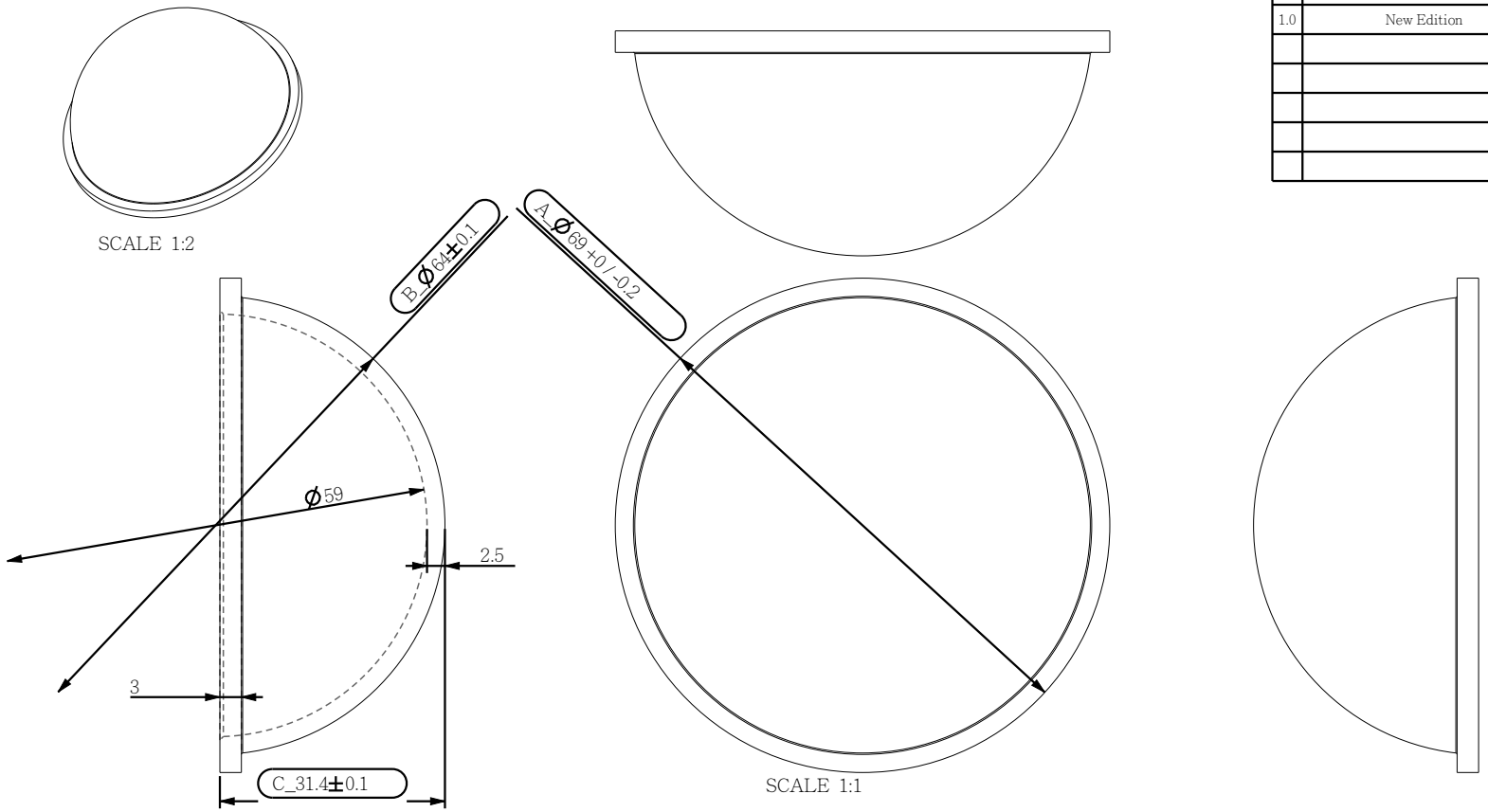

正式圖面

注意事項:
1.材質:PC(TEIJIN_L-1225Z)，具UL防火(94HB)與耐候(f1)等級
2.平均肉厚:2.5mm，成品重量:19.2 g
3.表面需硬化處理(Hard Coating)，硬度值>1H
4.H.C.吊柄剪斷後，缺口需確保平整或凹陷
5.成品需加貼保護膠膜(需耐溫70度/48hrs，無殘留痕跡)
6.成品表面不可有:成型不良痕跡、破損、油汙、殘料與毛邊，外觀級別請參照圖面標示
相關檢驗細則，請依據[Clear Cover檢驗作業規範]為標準
7.橢圓符號框選尺寸為重點檢驗尺寸(成品尺寸，非素材數值)，請依據圖面標示量測
8.參考尺寸以配合組裝為主要考量，必要時需要額外實配檢驗
9.*符號為CPK量測尺寸
10.變形量請依圖面標示或尺寸2.5%定義，毛邊<0.1mm
11.所有料件、組裝配件以及包裝之材質(此處指會隨我司成品出貨之包裝材)都需符合RoHS環保規範，並檢附相關報告
(需符合歐盟2011/65/EU法規之有害物質限制含量以下規定，且不接受任何排除條款)

UNLESS OTHERWISE SPECIFED
ALL DIMENSIONS ARE IN mm

TOLERANCE ON:
LINEAR :<30 ±0.10
30-50 ±0.15
50-100 ±0.18
100-200 ±0.20
200-300 ±0.25
>300 ±0.30
ANGULAR:X ±1°
X.X ±0.5°

VIVOTEK Incorporated

THIS DRAWING ON THIS PRINT AND INFORMATION THEREWITH ARE PROPRIETARY TO VIVOTEK INC. AND SHALL NOT BE USED OR DISCUSSED IN WHOLE OR IN PART WITHOUT VIVOTEK'S CONSENT.

WI-RD-03-01-4

PART NO.		600116100G			
ENGR	Double	MODEL	MD8565N		
DRN	Double	DRAWING TITLE	MD8565N_OPTICS_COVER		
CHK	Joy				
APRV		DRAWING NO.	FORM-V02_2014-12-16		
M'TL	透明PC(L-1225Z)	ISSUE DATE	03-Aug-16	REVISION	1.0
FINISH		SCALE	3:10	UNIT	mm
	第三角法	SIZE	A4	SHEET	1 OF 1

The following Page(s) are related to Illustration-3. The next supplement, if applicable, will be identified with a new Supplement Page Heading.

機 密|CONFIDENTIAL

REVISIONS

REV	DESCRIPTION	POSITION	ENGINEER	DATE
1.0	New Edition			Nov-17-20

注意事項:
1.材質:PC(帝人LN-3520ZH或Sabic 945).UL認證用料.晶睿白(色號:CM11006ZH)
3.部品表面需要咬花(MT11010)
5.成品色差請依據RAL 9003或參考色樣為標準，dE<1.5(請於生產前提供L,A,B和delta E的數據最少30pcs)
6.成品表面不可有成型不良痕跡、破損、油汙、殘料、積漆與毛邊、刮傷，髒汙，雜點，外觀級別請參閱圖面標示，相關檢驗細則， 請依據[塑膠機構類檢驗作業規範]為標準
7.橢圓符號框選尺寸為重點檢驗尺寸
8.*符號為CPK量測尺寸(量測數量最少為30pcs)毛邊<0.1mm
13.絕不可使用二次料,就算是部品本身的料頭也不允許當做二次料使用,若有需要,客戶端有權要求廠商提供MI值報告,廠商則有義務free support並於3天內提供測試報告
17.頂針不可高於產品面,只能低於產品面under0.1mm
21.模具資訊:模具壽命:30萬以上,模具穴數:1穴, 廠商有義務提供模具3D圖和DFM REPORT(幾板模?公母模水陸位置?進料點方式?頂針位置?模具噸數?公母模仁材質?模座材質?分模線?原料規格書?模具刻字位置?穴號位置?)和模具2D圖給晶睿確認

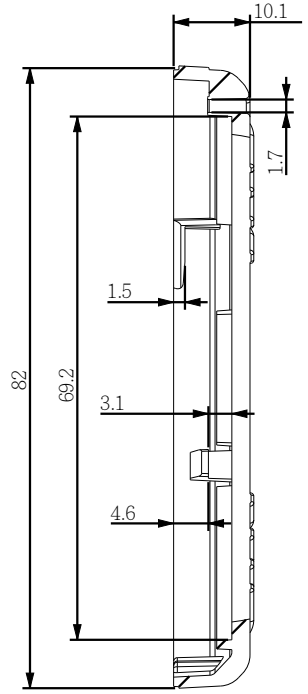

截面 A-A

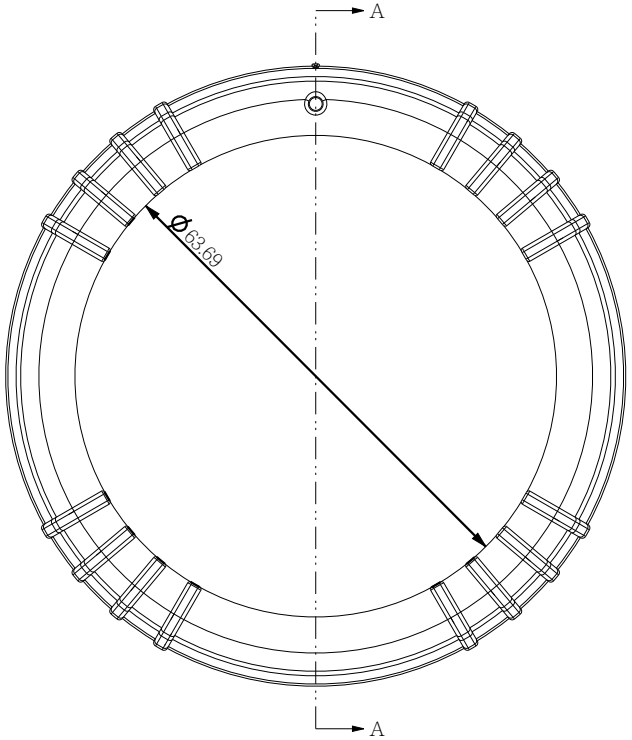

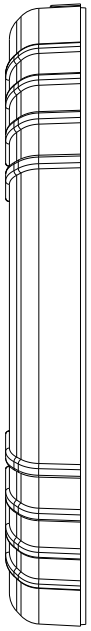

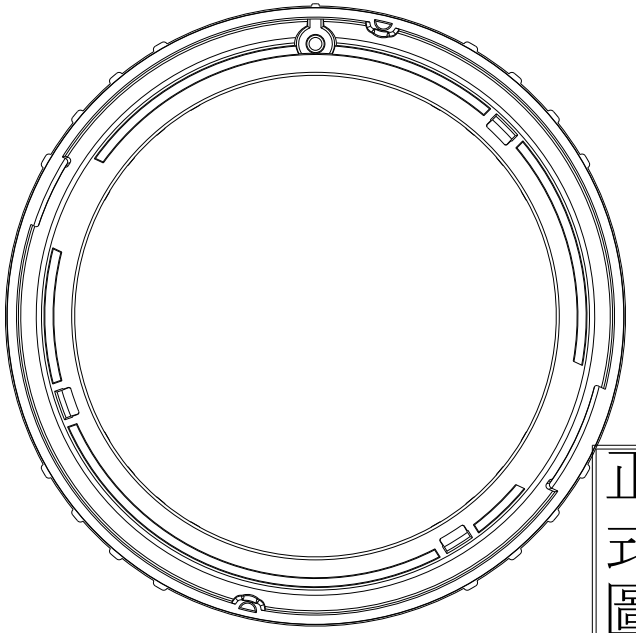

正式圖面

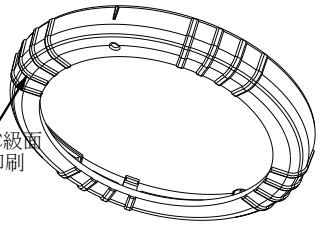

外側A級面.其他C級面
取消LOGO印刷

比例 1:2

All dimension without tolerance should conform to the grade on table F

公差等級	線性尺寸允許偏差 Range(mm)					
名稱	0.5~3	3~6	6~30	30~120	120~400	400~1000
F	±0.05	±0.05	±0.1	±0.15	±0.2	±0.3
M	±0.1	±0.1	±0.2	±0.3	±0.5	±0.8
C	±0.2	±0.3	±0.5	±0.8	±1.2	±2
USER						

公差等級	根據長度所允許角的短邊的角度偏差 Range(mm)					
名稱	≦10	10~50	50~120	120~400	>400	
F	±1°	±0° 30'	±0° 20'	±0° 10'	±0° 5'	
M						
C	±1° 30'	±1°	±0° 30'	±0° 15'	±0° 10'	
USER						

VIVOTEK Incorporated

THIS DRAWING ON THIS PRINT AND INFORMATION THEREWITH ARE PROPRIETARY TO VIVOTEK INC, AND SHALL NOT BE USED OR DISCUSSED IN WHOLE OR IN PART WITHOUT VIVOTEK'S CONSENT.

CP02-WI-014-01-6

PART NO.		600183700G			
ENGR	Double	MODEL	FD9182-H		
DRN	Double	DRAWING TITLE	FD9182-H-TOP-COV-WHITE		
CHK	TBD				
M'TL	晶睿白色PC	ISSUE DATE	Nov-17-20	REVISION	
FINISH	TBD	SCALE	1:1	UNIT	mm
	第三角法	SIZE	A4	SHEET	1 OF 1

The following Page(s) are related to Illustration-4. The next supplement, if applicable, will be identified with a new Supplement Page Heading.

機 密|CONFIDENTIAL

注意事項:
1.材質:AL(ADC12)，成品重量(3D Model模擬估算/成品實測):158g
2.部品必須後加工，包含部分CNC加工製程，相關加工細則，請依據圖面標示施做
3.部品需要烤漆晶睿白砂(#11030)，遮烤部分請依據遮烤示意圖面施做,膜厚<0.1mm,信賴性檢驗規範,需依照我司SPEC.
6.成品色差請依據PANTONE RAL 9003或參考色樣為標準，dE<1.5
7.成品表面不可有成型不良痕跡、破損、油汙、積漆、毛邊、刮傷、髒汙、雜點，外觀級別請參閱圖面標示，相關檢驗細則請依據[金屬機構類檢驗作業規範]為標準
8.參考尺寸以配合組裝為主要考量，必要時需要額外實配檢驗
9.橢圓符號框選尺寸為重點檢驗尺寸
10.*符號為CPK量測尺寸
11.變形量請依圖面標示,或尺寸0.25%定義
12.所有料件、組裝配件以及包裝之材質都需符合RoHS環保規範,需符合歐盟2011/65/EU法規之有害物質限制含量以下規定且不接受任何排除條款,如此才符合我司G料號的判定標準
13.包裝規範:包裝的設計不可讓產品在運送過程中, 有碰刮傷,甚至撞傷或是噴漆毀損剝落刮傷等等,包裝材質不可用報紙等...產品上不可有油汙,雜質和髒汙,高光部品需要有保護膜保護外觀
14.烤漆檢驗規範(尺寸):不可以影響各部位尺寸,圖面標柱的尺寸公差階為噴漆後的尺寸規範
15.烤漆檢驗規範(外觀):A/B/C級面,不可積漆粉塵異物沾黏沙孔掉漆漏底材等不良,未提及的部分請依照我司入料檢驗規範為標準
17.所有未標柱之尺寸都需要符合2D內的公差表
18.兩面外觀的料件, 公模面,頂針和分模線不可有模具油汙或是毛穴
19.頂針不可高於產品面,只能低於產品面under0.1mm

REVISIONS				
REV	DESCRIPTION	POSITION	ENGINEER	DATE
1.0	New Edition		Double	Sep-24-20
1.1	內部減肉0.29 mm	PCB接觸面	Double	MAR-17-21

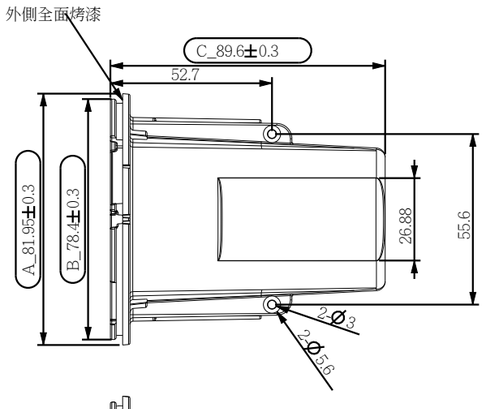

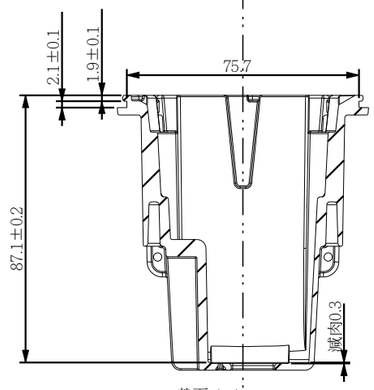

截面 A-A

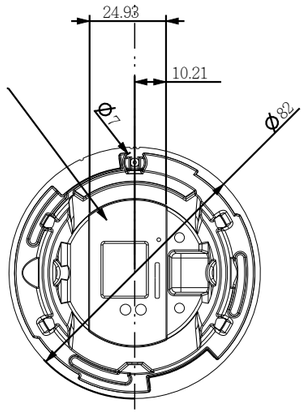

比例 1:2

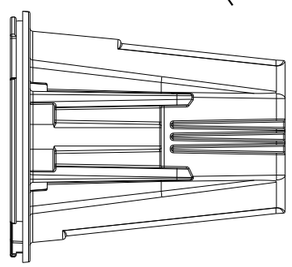

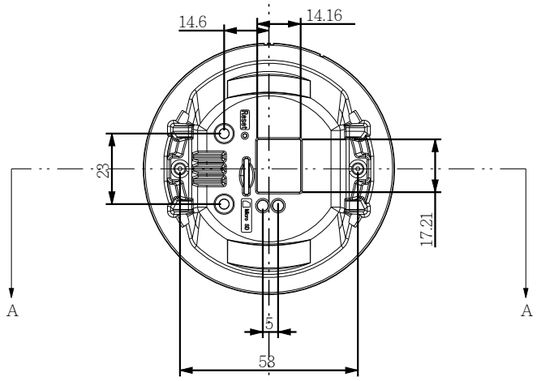

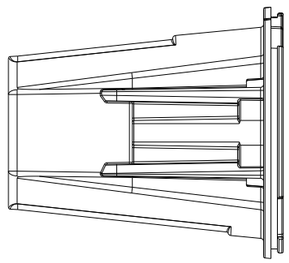

烤漆面B級面.其他C級面

鰭片底部烤漆不列入外觀檢驗

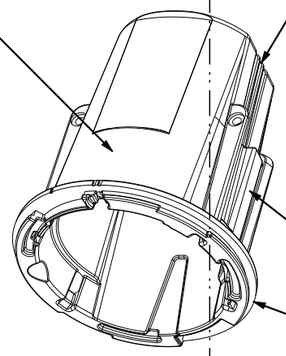

比例 1:2

CNC加工後烤漆
滑動面.不可影響上蓋旋入

M3貫穿

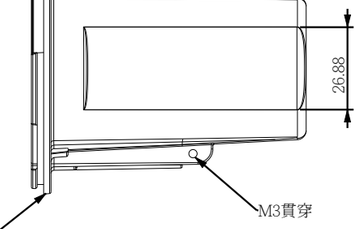

M3貫穿

外側與此面烤漆.內側可自然溢漆

正式圖面

All dimension without tolerance should conform to the grade on table F						
公差等級	線性尺寸允許偏差 Range(mm)					
名稱	0.5~3	3~6	6~30	30~120	120~400	400~1000
F	±0.05	±0.05	±0.1	±0.15	±0.2	±0.3
M	±0.1	±0.1	±0.2	±0.3	±0.5	±0.8
C	±0.2	±0.3	±0.5	±0.8	±1.2	±2
USER						
公差等級	根據長度所允許角的短邊的角度偏差 Range(mm)					
名稱	≦10	10~50	50~120	120~400	>400	
F / M	±1°	±0° 30'	±0° 20'	±0° 10'	±0° 5'	
C	±1° 30'	±1°	±0° 30'	±0° 15'	±0° 10'	
USER						

VIVOTEK Incorporated

THIS DRAWING ON THIS PRINT AND INFORMATION THEREWITH ARE PROPRIETARY TO VIVOTEK INC. AND SHALL NOT BE USED OR DISCUSSED IN WHOLE OR IN PART WITHOUT VIVOTEK'S CONSENT.

CP02-WI-014-01-6

PART NO.		600184000G			
ENGR	Double	MODEL	FD9182-H		
DRN	Double	DRAWING TITLE	FD9182-H-BODY-COVER		
CHK	TBD				
M'TL	ADC12	ISSUE DATE	Sep-24-20	REVISION	1.61
FINISH	晶睿白砂烤漆	SCALE	1:1	UNIT	mm
	第三角法	SIZE	A3	SHEET	1 OF 1

The following Page(s) are related to Illustration-5. The next supplement, if applicable, will be identified with a new Supplement Page Heading.

NOTE:

Camera Hardware Preventative Maintenance:

1. Visual inspection of all major components including accessories, cabling and connections where accessible for signs of deterioration or damage.
2. Check and clean cameras, lenses and housings inside and out as needed.
   - Please do not scratch, damage, or leave fingerprints on the dome/front cover and/or lens because this may decrease image quality.
   - For general cleaning of dirty areas, it is suggested to use compressed air to remove dust and/or other debris in order not to damage the on-board components.
   - In order to clean oil stains, it is recommended to use a spray-type decomposing cleaner (absolutely avoid reciprocating wipes on the surface). After the oil has decomposed, spray it with water, dry with air, and/or absorb water with a cotton cloth or a soft cloth (dab, please avoid wiping).
   - Do not use harsh detergents, gasoline, benzene or acetone, etc. to clean as they may deform or cause damage to the product. Also, excessive cleaning could damage the surface.
3. Check images for correct field of view (pan, tilt and zoom focus) and adjust as necessary.
4. Check and replace the Micro SD memory card as needed.
   - Stop edge recording before removing the Micro SD memory card.
   - Make sure that the Micro SD memory card is right side up and do not insert it with force, otherwise it may be damaged.
   - When it is raining or the humidity is high, insertion or ejection of the Micro SD memory card is not recommended.
5. Disassembly of the dome/front cover carries the risk of internal dew condensation, so please remember to replace the desiccant bags on the inside of the cameras before reassembly.
6. Check that the camera view has not been blocked by obstacles and that you can see the property perimeter clearly.
7. Make sure the interiors of cameras and accessories, like mounting kits and/or enclosures, are clean and dry.
8. Make sure cameras are securely attached to the wall/ceiling/mounting kits.

IMPORTANT:

1. Please contact VIVOTEK's certified dealers for power adapters.
2. Installation and maintenance service should only be performed by qualified technicians.
3. If powered by a power adapter, the adapter should be properly grounded.
4. The power cord must be connected to a socket or outlet with a ground connection.

IMPORTANT:

1. The product must be installed and protected in a location that is not easily accessible, and is away from impacts or heavy vibration. For example, at the location where the surveillance cameras are looking down or installed at high positions such as on a wall, or at least 3 meters above the ground.
2. The camera should be installed at least 10 centimeters away from the eave of a building.
3. If powered by a power adapter, the adapter should be properly grounded.
4. Maintenance and repair work must always be carried out by qualified technical personnel.
5. Disconnect power from the unit when performing a maintenance task.
6. Please contact VIVOTEK's certified dealers for power adapters.

IMPORTANT:

1. The camera is only to be connected to PoE networks without routing to outside plants.
2. For PoE connection, use only UL listed I.T.E. with PoE output.

1. La caméra ne doit être raccordée qu’à des réseaux PoE, sans routage vers des installations extérieures.
2. Pour les raccordements PoE, utilisez uniquement un équipement de TI homologué UL, avec une sortie PoE.

Use the camera only with a DC power supply that is UL listed, and limited power source (LPS) certified. The power supply should bear the UL listed and LPS marks. The power supply should also meet any safety and compliance requirements for the country of use.

n’utilisez la caméra qu’avec un bloc d’alimentation CC homologué UL, ainsi qu’avec une alimentation limitée (LPS) certifiée. Le bloc d’alimentation doit porter les indications d'homologation UL et LPS. Il doit également répondre aux exigences en matière de sécurité et de conformité relatives au pays d’utilisation.

TEST RECORD NO. 1

SAMPLES:

The manufacturer submitted representative production samples of Network Camera, Model FE9192-H for investigation.

GENERAL:

Test results relate only to the items tested.

Unless otherwise noted, all clauses and tests were not considered necessary based upon previous evaluation under the CB scheme. The CB Scheme Test Certificate Ref. No. DK-115570-UL, dated 2021-07-01, and Report Ref. No. SU0041-21006 issued on 2021-06-30 was prepared by UL (Demko).

The following tests were conducted:

Test	Testing Location/Comments
See CB report	Refer to CB report

The following tests were waived:

Test	Rationale for Waiving
Refer to CB report	See CB Report

The following supplements are provided as a part of this Test Record. NOTE: These supplements are only available to the Applicant via the CDA system.

Type	Supplement Id	Description
Attachment	01	CRD

Test Record Summary:

The results of this investigation, including construction review and testing, indicate that the products evaluated comply with the applicable requirements in the U.S. and Canadian (Bi-National) Standard for Safety of Audio/video, information and communication technology equipment - Part 1: Safety requirements CAN/CSA-C22.2 No.62368-1 2nd Edition, issued Date December, 2014, UL 62368-1 Audio/video, information and communication technology equipment - Part 1: Safety requirements, 2nd edition date December 1st, 2014. Any Information and documentation involving UL Mark services are provided on behalf of UL LLC (UL) or any authorized licensee of UL.

CONCLUSION

A sample of the product covered by this Report has been found to comply with the requirements covering the category and the product is found to comply with UL's applicable requirements. The description and test result in this Report are only applicable to the sample(s) investigated by UL and does not signify UL certification or that the product(s) described are covered under UL's Follow-Up Service Program. When covered under UL's Follow-Up Service Program, the manufacturer is authorized to use the Certification Mark of UL on such products which comply with UL's Follow-Up Service Procedure and any other applicable requirements of UL LLC. The Certification Mark of UL on the product, or the UL symbol on the product and the Certification Mark of UL on the smallest unit container in which the product is packaged, is the only method to identify products investigated by UL to published requirements and manufactured under UL's Listing and Follow-Up Service.

This Report is intended solely for the use of UL LLC (UL) and the Applicant for establishment of UL certification coverage of the described product(s) under UL's Follow-Up Service. UL retains all rights, title and interest (including exclusive ownership) in this Report and all copyright therein. The Applicant or its designated agent shall not disclose or otherwise distribute this Report or its contents to any third party, except as required for purposes of compliance with laws, regulations, or other existing agreements or schemes in which UL is currently a participant. Any other use of this Report including, without limitation, evaluation or certification by a party other than UL is prohibited and renders the Report null and void. UL shall not incur any obligation or liability for any loss, expense, or punitive damages, arising out of, or in connection with, the use or reliance upon the contents of this Report to anyone other than the Applicant as provided in the agreement between UL and Applicant. Any use or reference to UL's name or certification mark(s) by anyone other than the Applicant in accordance with the agreement is prohibited without the express written approval of UL. Any information and documentation involving UL Mark services are provided on behalf of UL LLC (UL) or any authorized licensee of UL. Any information and documentation involving UL Mark services are provided on behalf of UL LLC (UL) or any authorized licensee of UL. UL shall not otherwise be responsible to anyone for the use of or reliance upon the contents of this Report.

Report by:	Reviewed by:
Stanley Tsai	Max Ma
Project Engineer Conformity Assessment Services	Senior Project Engineer Conformity Assessment Services